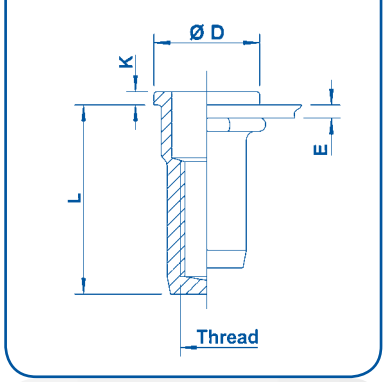

MADE IN BELGIUM
EN 9100
CERTIFIED

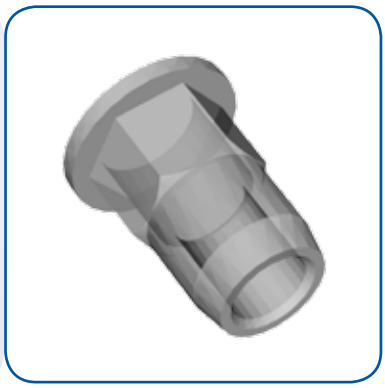

TUBTARA®

Blind rivet nuts

catalogue

Edition March 2015

2015 — Acquisition of Visserie Guerry (Brussels) by Dejond
New optical control machine

2014 — EN 9100:2009 / AS 9100C accreditation for the aerospace
TUBTARA® 60 years of innovation!

2013 — First to cold form Tubtara's in stainless A5 & A6

2012 — New coatings, development of the watertight HX **TUBTARA®** in stainless 304 & 316

2009 — Year dedicated to R&D despite the tough economical situation worldwide

2008 — New heading machine for production of more difficult parts

2007 — Important investments in the production e.g. new degreasing and tapping machines

2005 — First to cold form blind rivet nuts in stainless steel 316
Zinktop: Dejond's new Cr^{VI}-free surface treatment

2004 — **TUBTARA®** celebrates its 50th birthday!

2002 — ISO 9001/2000 accreditation by BVQI (Bureau Veritas)

2000 — Opening of an extension to the production facility

1989 — First to cold form blind rivet nuts in stainless steel 304

1966 — Dejond becomes one of the first European manufacturers producing cold formed blind rivet nuts

1954 — Launch of the **TUBTARA®** blind rivet nut

1938 — Dejond starts to manufacture solid rivets

1901 — Foundation of the company by the family Dejond

Contents

About Dejond : Metal Matters

Started as a small metal stockist in 1901, Dejond turned into a leading supplier to the industry, renowned for its high know-how in metal. About 100 employees are dedicated to offer tailor-made solutions and establish the long term partnerships with their customers and suppliers around the globe.

Core business :

- stockkeeping wholesaler of non-ferrous metals with service center,
- distributor of exclusive systems for architecture and building,
- industrial supplier of high quality, value-added mechanical fasteners and fastening systems,
- R&D, production, marketing and sales of **TUBTARA®** blind rivet nuts.

Considerable investments over the years helped Dejond to strengthen its position of trendsetter and solution provider.

Dejond's name stands for high quality products, a multi-industry supply, prompt order processing, on time deliveries and a reliable (after-sales) service. It wants to play a leading role in product developments, always focused on the current and future needs of the users.

METAL MATTERS : Dejond does not only deliver metal products, it primarily offers a committed customer partnership.

Dejond: the industrial specialist in fastening technology

On its home market Dejond has become a major player in fastening technology by offering a full range of high quality mechanical fasteners manufactured by different internationally recognized suppliers, including its own **TUBTARA®** blind rivet nut range. It serves the general, automotive and aerospace industries.

Thanks to the regular product trainings at the suppliers, its in house expertise and the continuous search for new products, Dejond's people are able to keep pace with the latest market requirements & trends. In strong partnership with its suppliers, Dejond tries to solve its customers' problems and offer the appropriate product for their specific applications.
In other words : offer a total quality solution.

Dejond is **EN 9100 certified** for the distribution of high value fastening systems, a special requirement of the aerospace industry.

Visserie Guerry

Visserie Guerry, manufacturer of high-tech screws since 1924, has become a Dejond company in 2015. Thanks to its extensive market knowledge and experience in cold forming, Visserie Guerry serves an array of customers with technically advanced products. A perfect fit with the Dejond vision.

TUBTARA®: Riveting Matters

In 1954 Dejond launched its first **TUBTARA®** blind rivet nuts, machined on a lathe. Only 10 years later the production started specializing in cold forming technology. Today Dejond offers one of the widest, cold formed ranges of high quality blind rivet nuts in the world, all manufactured in its EN 9100 certified production facility in Wilrijk (Belgium). **TUBTARA®** is Dejond's registered brandname.

Besides standard and customized blind rivet nuts, the Tubtara Division also concentrates on cold forming selected parts according to customers' drawings for very specific applications.

EN 9100
BUREAU VERITAS
Certification

TUBTARA® : Riveting Matters

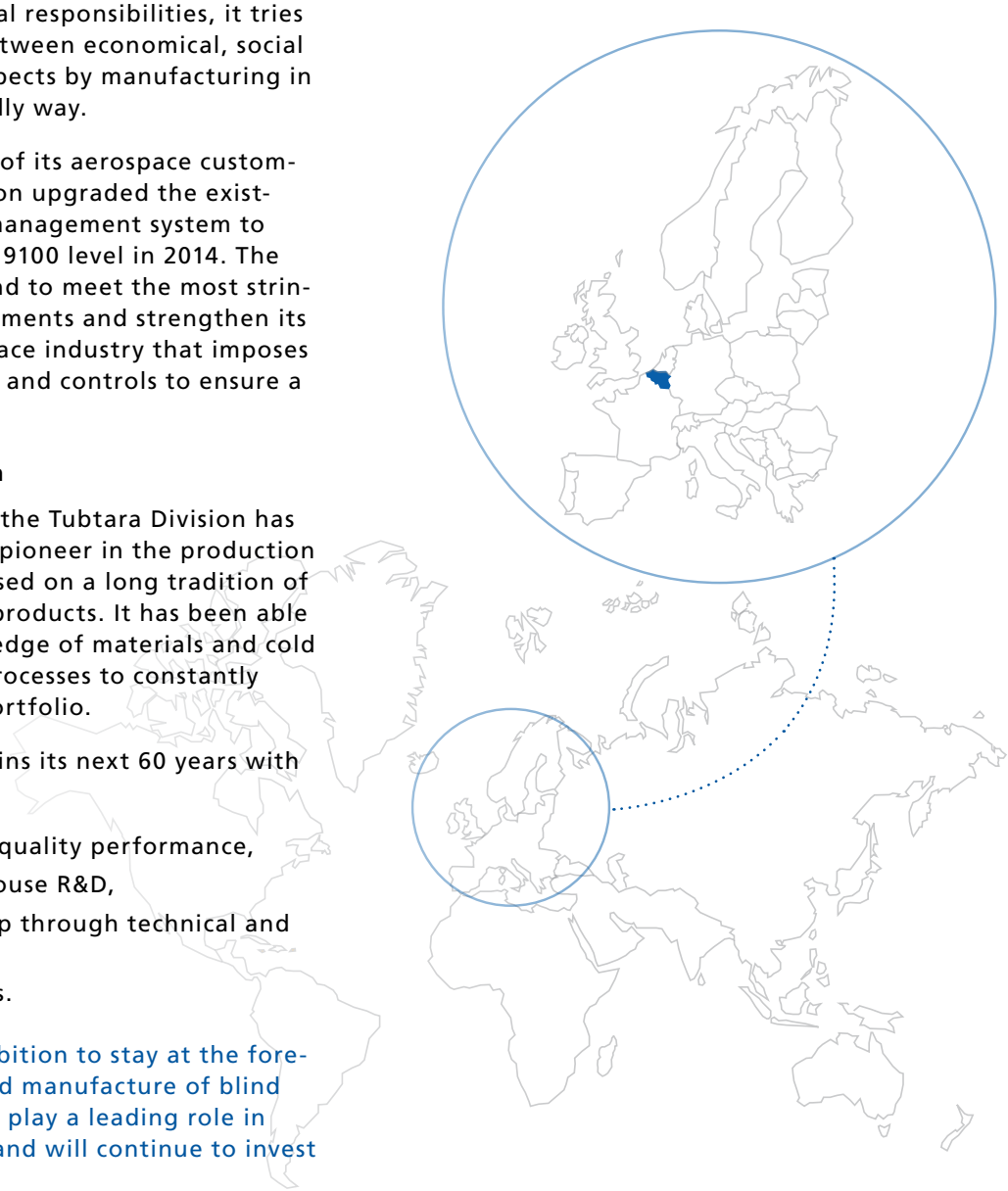

Quality guaranteed

The entire Tubtara team is involved in quality assurance and more than ever committed to meet the challenges that lie ahead. Living up to its social and ecological responsibilities, it tries to create a balance between economical, social and environmental aspects by manufacturing in an environment-friendly way.

Upon specific request of its aerospace customers, the Tubtara division upgraded the existing ISO 9001 quality management system to the higher EN/AS/JISQ 9100 level in 2014. The certificate helps Dejond to meet the most stringent customer requirements and strengthen its position in the aerospace industry that imposes strict safety standards and controls to ensure a reliable quality.

60 years of innovation

Over the last 60 years the Tubtara Division has established itself as a pioneer in the production of blind rivet nuts, based on a long tradition of innovations and new products. It has been able to use its deep knowledge of materials and cold forming production processes to constantly develop its product portfolio.

The Tubtara team begins its next 60 years with a clear vision :

- high and consistent quality performance,
- innovation and in-house R&D,
- customer partnership through technical and commercial support,
- worry-free deliveries.

TUBTARA® has the ambition to stay at the forefront of the design and manufacture of blind rivet nuts. It wants to play a leading role in future developments and will continue to invest in R&D.

TUBTARA® Blind rivet nuts

TUBTARA® is a mechanical fastener that ensures a strong thread in thin and thick metal plates / profiles, composites or plastics. It is used in applications where there is little or no access from the rear. It can clinch separate sheets together (acting as a rivet) and allows you to (dis)assemble another component with a bolt or screw.

Benefits

- Simple blind (one sided) installation
- Fast assembly time : the speed & ease of assembly reduces the cost of **TUBTARA®** versus other methods of providing threads in plates or profiles
- Low assembly costs
- Avoids damaging the surface of the workpiece: can be installed in pre-coated or pre-painted applications ensuring a clean undamaged thread
- No deformation of the workpiece
- No surface preparation
- Low installation cost : no expensive setting tools needed
- Works in close-to-edge applications
- Retained fastener cfr. machinery directive 2006/42/EC
- Appropriate for repeated assembly

Applications

A **TUBTARA®** is used in all kinds of sheet metal and composite applications. It avoids tapping, welding and working with a bolt and nut. It's a very good solution for enclosed applications that can only be accessed from one side. Some marketsegments:

- Aerospace
- Automotive
- White Goods
- Electronics
- Metal furniture
- Railways
- Telecom
- Food
- Chemicals
- Lighting
- Marine
- Offshore
- Medical
- Pulp & paper
- etc...

e.g. cabinets, pipes, cable trays, leg levelling, window & door profiles, rails, benches, fences, metal enclosures, heating installations, airconditioning, swimming pools, solar panels etc.

Installation

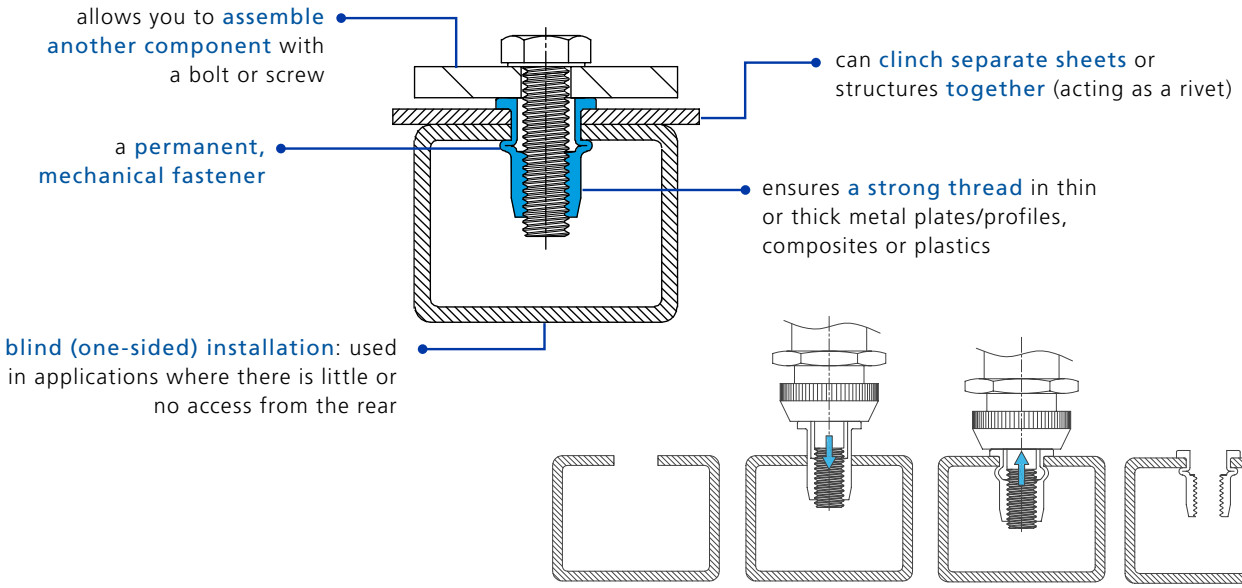

Installation in 3 seconds!

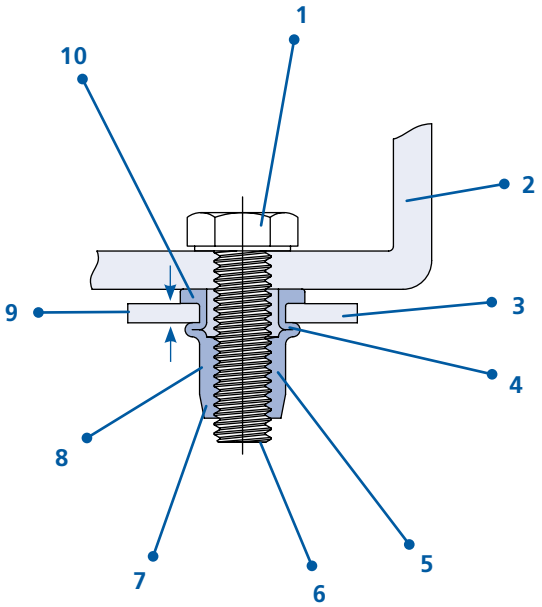

Terminology

1. Screw or bolt inserted for assembly
2. Assembled part
3. Workpiece: can be 1 sheet or several sheets which have to be clinched
4. Bulb or counterhead: the chamber (unthreaded part) of the **TUBTARA®** deformed after setting
5. Strong, secured internal thread of the **TUBTARA®**
6. Open or closed end: closed end version prevents the ingress of dirt & fluids especially in combination with an underhead seal
7. Chamfer: leads the **TUBTARA®** into the hole
8. Shank: round, (semi-)hexagonal, knurled or splined version
9. Grip: the exact material thickness of the workpiece
10. Head: flat, countersunk, low profile, watertight, anti-turn or customized head types

Product Description

Steel	M5	RS	UFO	40
Stainless	M10	H	SPX	35
Aluminium	M8	-	UPO	80
Steel	M6	-	MPO	50
Steel	M4	KN	UKO	30
↓	↓	↓	↓	↓
material	**thread**	**shank**	**head & shank**	**max grip**
		RS: splined	U / S: Unigrip	40 = 4 mm
		H: hexagonal	M: Multigrip	35 = 3,5 mm
		KN: knurled	F: countersunk head	80 = 8 mm
		- : round	P: flat head	50 = 5 mm
			K: low profile head	30 = 3 mm
			O: open end	
			X: closed end	

How to choose the appropriate TUBTARA® ?

- What kind of material and surface treatment do you need?
- What is the required thread size?
- Choose the correct griprange for the required material thickness of the application.
- Choose the required head and shank style.
- Do you need an open or closed end version?
- Check the technical characteristics of the chosen **TUBTARA®**.

We advise you to do some tests on the suitable product in the specific application beforehand.
Samples are available on request.

Specials

Don't you find the appropriate **TUBTARA®** in this catalogue?

TUBTARA® blind rivet nuts manufactured to customers' specifications, can be developed to suit the demands of almost every application.

Always take the following into consideration:

- Give us an accurate description of the application.
- Do you have a drawing with indication of sizes, tolerances, material type and exact sheet thickness?
- Are there other special features and important remarks we need to know?
- Can you give us a sample of the application and/or present fastener?
- Do you have special technical requirements like torque value, upset load, tensile or thread strength etc.?
- What type of setting equipment will be used?

Our R&D people will evaluate your request and our Sales Department will provide you with information.

Some examples of additional features providing innovative solutions for your problems :

- Increased torque-to-turn / spin-out resistance
- Spacer function
- Controlled deformation
- (Full) integration into parent material (e.g. composites)
- Flush installation
- Seal function
- Visual identification
- Centering
- Search function (for automatic installation)
- Pressure spread
- Facilitate field repair (increased torque-to-turn resistance)
- Compatibility with fasteners
- Compatibility with tools
- Drip / dry function (paint, oil, ...)
- Blind installation / limited space
- Special thread requirements
- (Electrical) conductivity
- Increased push-out force
- Increased pull-out force (thread strength)
- Anti-vibration
- Customized grip (range)











Stainless Steel 304

Round shank
Flat head
Open end

UPO / SPO

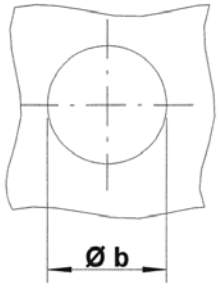

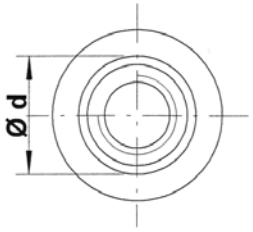

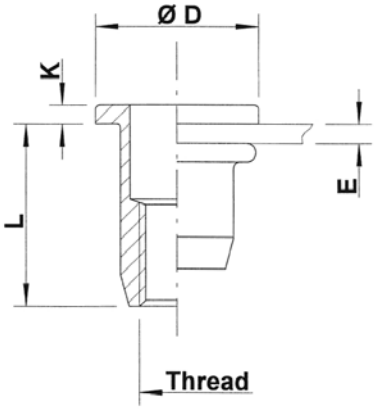

THREAD	TYPE	E = grip	L	b+0,1 = drill dia	d = shank dia	D	K	kg/1000	ORDER CODE	BOX Q
M4	UPO20	0,5-2,0	11,0	6,0	6,0	9,0	1,0	1,5	544 010	7500
	UPO35	2,0-3,5	12,5					1,6	544 020	5000
M5	UPO30	0,5-3,0	11,5	7,0	7,0	10,0	1,0	1,8	545 040	4000
	UPO50	3,0-5,0	15,0					2,2	545 050	3000
M6	UPO30	0,5-3,0	14,5	9,0	9,0	12,0	1,5	4,1	546 020	2000
	UPO50	3,0-5,0	16,5					4,4	546 035	2000
	UPO70	5,0-7,0	18,5					4,7	546 050	2000
M8	UPO30	0,5-3,0	16,0	11,0	11,0	15,0	1,5	6,1	548 010	1250
	UPO55	3,0-5,5	18,5					6,5	548 020	1250
	UPO80	5,5-8,0	21,5					7,1	548 035	1000
M10	UPO30	0,8-3,0	18,5	12,1	12,0	15,0	1,0	5,9	540 020	1000
	UPO50	3,0-5,0	20,5					6,0	540 030	1000
M10	SPO35	0,8-3,5	21,5	13,0	13,0	17,0	1,5	10,2	540 600	750
	SPO60	3,5-6,0	24,0					10,9	540 605	750

All dimensions in mm - Technical data subject to modification
Tolerances and characteristics see chapter "Technical Data"

MADE IN BELGIUM EN 9100 CERTIFIED

Stainless Steel 304

Round shank
Flat head
Closed end

UPX / SPX

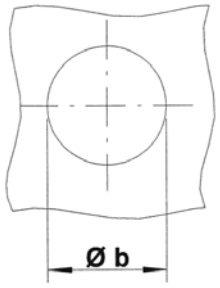

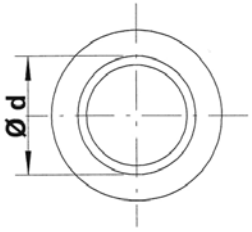

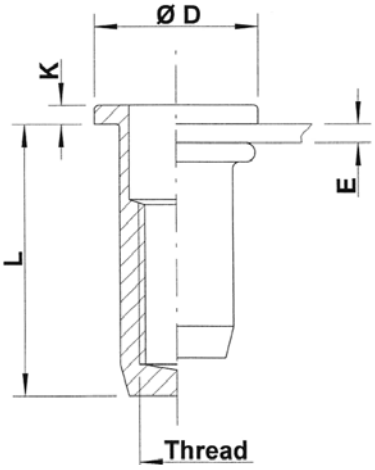

THREAD	TYPE	E = grip	L	$b^{+0,1}$ = drill dia	d = shank dia	D	K	kg/1000	ORDER CODE	BOX Q
M4	UPX20	0,5-2,0	15,0	6,0	6,0	9,0	1,0	2,2	544 110	5000
M5	UPX30	0,5-3,0	17,5	7,0	7,0	10,0	1,0	3,0	545 180	2500
	UPX50	3,0-5,0	19,5					3,2	545 185	2500
M6	UPX30	0,5-3,0	21,5	9,0	9,0	12,0	1,5	6,6	546 100	1500
	UPX50	3,0-5,0	23,5					6,9	546 105	1500
M8	UPX30	0,5-3,0	23,5	11,0	11,0	15,0	1,5	9,9	548 065	1000
	UPX55	3,0-5,5	26,0					10,2	548 066	750
M10	SPX35	0,8-3,5	28,5	13,0	13,0	17,0	1,5	15,0	540 630	500

All dimensions in mm - Technical data subject to modification
Tolerances and characteristics see chapter "Technical Data"

MADE IN BELGIUM EN 9100 CERTIFIED

Stainless Steel 304

Round shank
Countersunk head
Open end

UFO / SFO

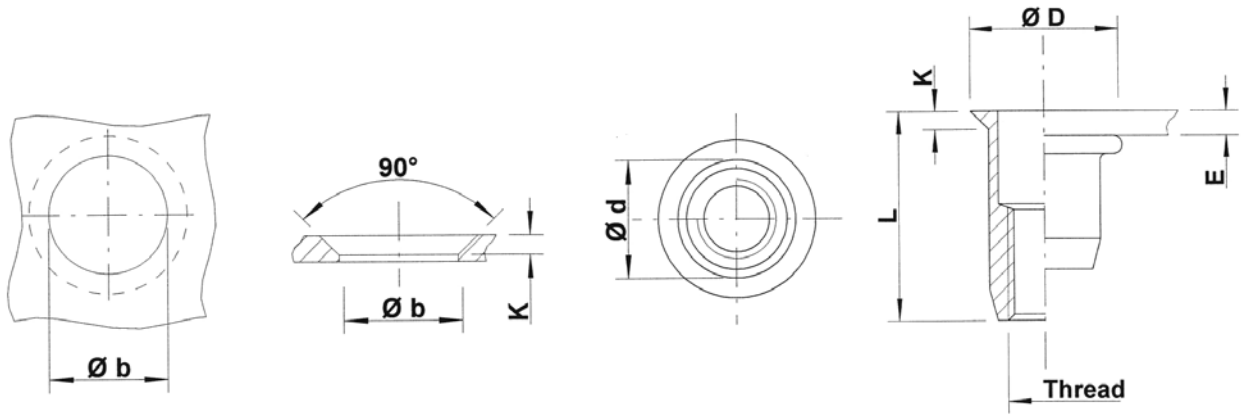

THREAD	TYPE	E = grip	L	$b^{+0,1}$ = drill dia	d = shank dia	D	K	kg/1000	ORDER CODE	BOX Q
M4	UFO30	1,2-3,0	12,0	6,0	6,0	8,0	1,0	1,3	544 120	7500
M5	UFO35	1,2-3,5	12,0	7,0	7,0	9,0	1,0	1,6	545 200	5000
M6	UFO45	1,7-4,5	17,0	9,0	9,0	12,0	1,5	4,2	546 125	2000
	UFO65	4,5-6,5	19,0					-	546 130*	-
M8	UFO45	1,7-4,5	17,5	11,0	11,0	14,0	1,5	5,5	548 070	1250
	UFO65	4,5-6,5	19,5					5,8	548 075	1250
M10	UFO45	1,7-4,5	20,0	12,1	12,0	15,0	1,5	5,9	540 090	1000
M10	SFO45	1,7-4,5	22,5	13,0	13,0	16,0	1,5	9,5	540 610	750

** **Non-stock item:** minimum order quantity required after depletion of stock*

All dimensions in mm - Technical data subject to modification
Tolerances and characteristics see chapter 'Technical Information'

MADE IN BELGIUM EN 9100 CERTIFIED

Stainless Steel 304

Round shank
Low profile head
Open end

UKO / SKO

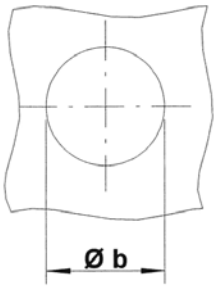

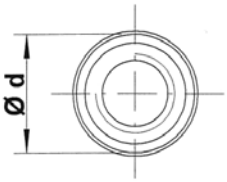

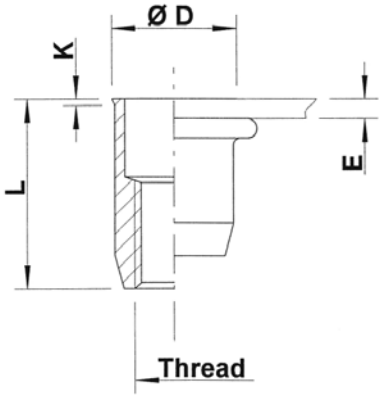

THREAD	TYPE	E = grip	L	$b^{+0,1}$ = drill dia	d = shank dia	D	K	kg/1000	ORDER CODE	BOX Q
M4	UKO20	0,5-2,0	11,0	6,0	6,0	6,5	0,5	1,1	544 220	10000
M5	UKO30	0,5-3,0	12,0	7,0	7,0	7,5	0,5	1,5	545 400	5000
	UKO50	3,0-5,0	15,0					1,8	545 420	5000
M6	UKO30	0,5-3,0	14,5	9,0	9,0	9,5	0,5	-	546 400	3000
	UKO50	3,0-5,0	16,5						546 420*	-
M8	UKO30	0,5-3,0	16,0	11,0	11,0	11,5	0,5	5,0	548 160	2000
	UKO55	3,0-5,5	18,5					5,5	548 180	1500
M10	SKO35	0,8-3,5	21,0	13,0	13,0	13,5	0,5	8,5	540 620	1000

** **Non-stock item:** minimum order quantity required after depletion of stock*

All dimensions in mm - Technical data subject to modification
Tolerances and characteristics see chapter 'Technical Information'

MADE IN BELGIUM EN 9100 CERTIFIED

Stainless Steel 304

Round shank
Low profile head
Closed end

UKX

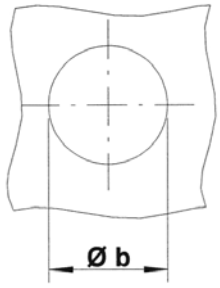

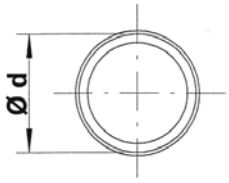

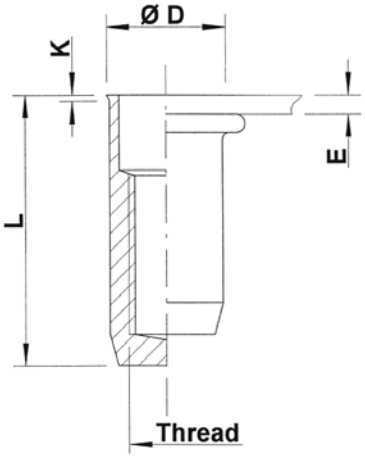

THREAD	TYPE	E = grip	L	$b^{+0,1}$ = drill dia	d = shank dia	D	K	kg/1000	ORDER CODE	BOX Q
M4	UKX20	0,5-2,0	15,5	6,0	6,0	6,5	0,5	1,9	544 250	5000
M5	UKX30	0,5-3,0	18,0	7,0	7,0	7,5	0,5	2,7	545 450	4000
M6	UKX30	0,5-3,0	21,5	9,0	9,0	9,5	0,5	5,8	546 450	2000
M8	UKX30	0,5-3,0	24,0	11,0	11,0	11,5	0,5	8,8	548 190	1250

***M10:** programme in progress*

All dimensions in mm - Technical data subject to modification
Tolerances and characteristics see chapter 'Technical Information'

MADE IN BELGIUM EN 9100 CERTIFIED

Stainless Steel 304

Round shank
Anti-turn head
Open end

ATO

easy repair solution: extra high torque-to-turn values

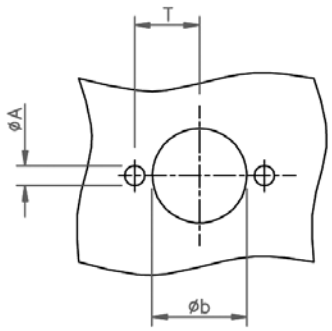

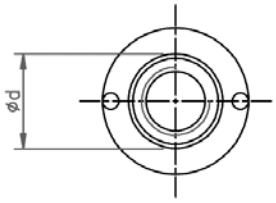

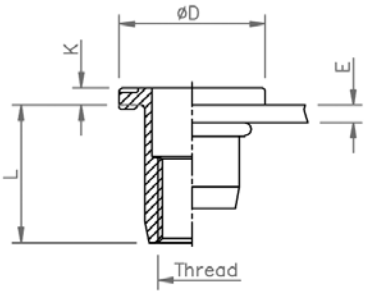

THREAD	TYPE	E = grip	L	b+0,1 = drill dia	d = shank dia	D	K	A	T	kg/ 1000	ORDER CODE	BOX Q
M6	ATO30	0,5-3,0	14,5	9,0	9,0	14,0	1,5	1,8	6,25	-	-	-
M8	ATO30 ATO55	0,5-3,0 3,0-5,5	16,0 18,5	11,0	11,0	17,0	2,0	2,3	7,5	7,4 7,8	548 1010* 548 1020*	1200 1000
M10	ATO35	0,8-3,5	21,0	13,0	13,0	19,0	2,0	3,0	8,75	11,3	540 1600*	750

Tool to position Ø A:

M6	AT 206
M8	AT 208
M10	AT 210

Samples available from stock

All dimensions in mm - Technical data subject to modification
Tolerances and characteristics see chapter 'Technical Information'

MADE IN BELGIUM EN 9100 CERTIFIED

Stainless Steel 304

Round shank
Flat head with underhead seal
Closed end

DPX

watertight IP67[1]

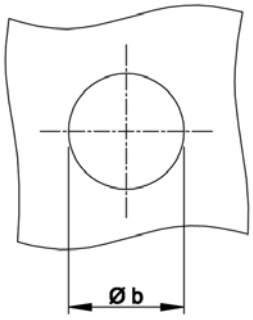

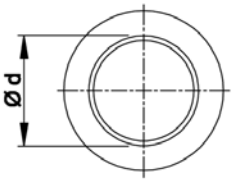

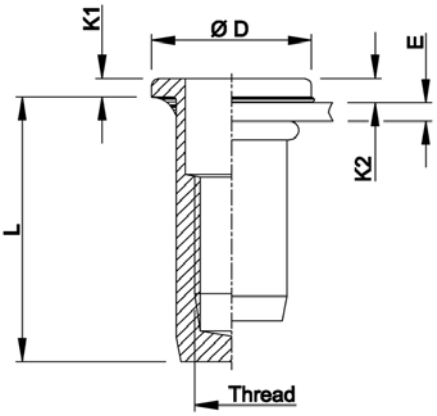

THREAD	TYPE	E = grip	L	$b^{+0,1}$ = drill dia	d = shank dia	D	K1	K2	kg/1000	ORDER CODE	BOX Q
M4	DPX15	0,5-1,5	15,0	6,0	6,0	9,0	1,0	1,3	2,2	544 1105	5000
M5	DPX25	0,5-2,5	17,5	7,0	7,0	10,0	1,0	1,3	3,0	545 1805	2500
	DPX45	2,5-4,5	19,5						3,2	545 1855	2500
M6	DPX25	0,5-2,5	21,5	9,0	9,0	12,0	1,5	1,9	6,7	546 1005	1500
	DPX45	2,5-4,5	23,5						6,9	546 1055	1500
M8	DPX25	0,5-2,5	23,5	11,0	11,0	15,0	1,5	2,0	9,9	548 0655	1000
	DPX50	2,5-5,0	26,0						10,3	548 0665	750

All dimensions in mm - Technical data subject to modification
Tolerances and characteristics see chapter "Technical Data" and *pg 60*

[1] IP 67 guaranteed under Dejond test conditions

K2: Reference values only. Several factors (seal thickness, hole size, setting force ...) influence head and seal thickness after installation.

MADE IN BELGIUM EN 9100 CERTIFIED

Stainless Steel 304

Knurled shank
Flat head
Open end

UPO KN

improved nominal knurl

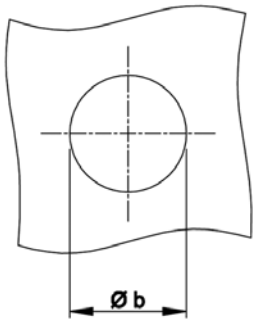

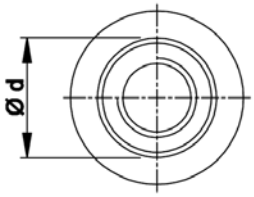

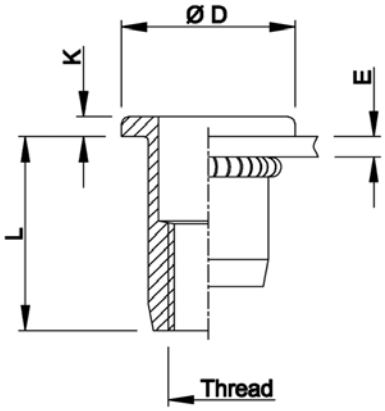

THREAD	TYPE	E = grip	L	$b^{+0,1}$ = drill dia	d = shank dia	D	K	kg/1000	ORDER CODE	BOX Q
M4	UPO20 KN	0,5-2,0	11,0	6,0	6,0	9,0	1,0	1,5	544 0107*	7500
M5	UPO30 KN	0,5-3,0	11,5	7,0	7,0	10,0	1,0	1,8	545 0407*	4000
M6	UPO30 KN	0,5-3,0	14,5	9,0	9,0	12,0	1,5	4,1	546 0207	2000
M8	UPO30 KN	0,5-3,0	16,0	11,0	11,0	15,0	1,5	6,1	548 0107*	1250

** **Non-stock item:** minimum order quantity required after depletion of stock*

KN programme in progress (also UFO-version)

All dimensions in mm - Technical data subject to modification
Tolerances and characteristics see chapter 'Technical Information'

MADE IN BELGIUM EN 9100 CERTIFIED

Stainless Steel 304

Knurled shank
Low profile head
Open end

UKO KN

improved nominal knurl

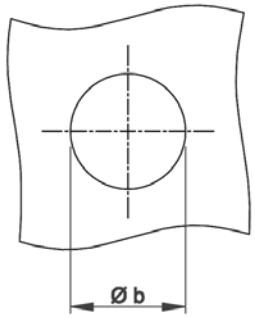

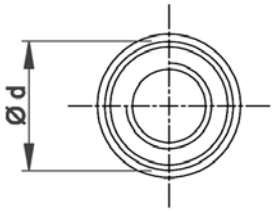

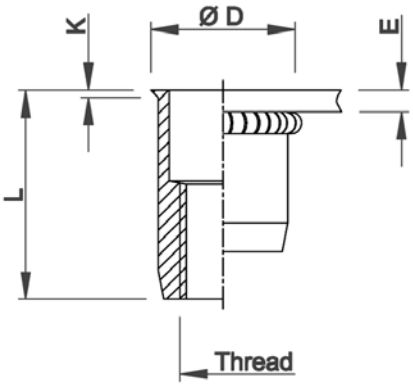

THREAD	TYPE	E = grip	L	$b^{+0,1}$ = drill dia	d = shank dia	D	K	kg/1000	ORDER CODE	BOX Q
M4	UKO20 KN	0,5-2,0	11,0	6,0	6,0	6,5	0,5	1,1	544 2207	10000
M5	UKO30 KN	0,5-3,0	12,0	7,0	7,0	7,5	0,5	1,5	545 4007	5000
M6	UKO30 KN	0,5-3,0	14,5	9,0	9,0	9,5	0,5	3,4	546 4007	3000
M8	UKO30 KN	0,5-3,0	16,0	11,0	11,0	11,5	0,5	5,0	548 1607	2000

KN programme in progress (also UFO-version)

All dimensions in mm - Technical data subject to modification
Tolerances and characteristics see chapter 'Technical Information'

MADE IN BELGIUM EN 9100 CERTIFIED

Stainless Steel 304

Semi-hexagonal shank
Flat head
Open end

HUPO / HSPO

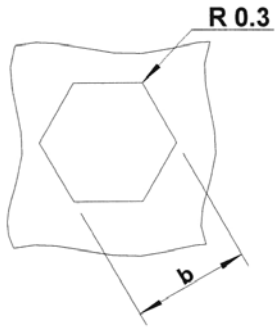

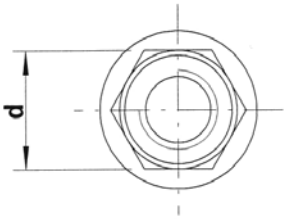

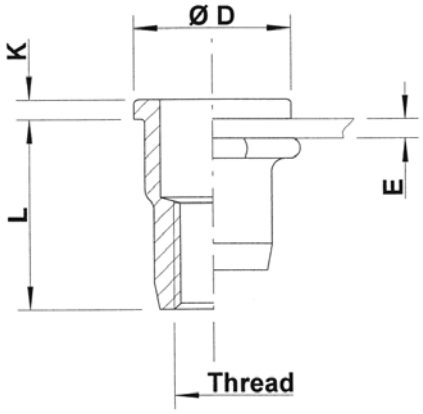

THREAD	TYPE	E = grip	L	$b^{+0,1}$ = hex hole	d = hex shank	D	K	kg/1000	ORDER CODE	BOX Q
M4	HUPO20	0,5-2,0	11,0	6,0	6,0	9,0	1,0	1,5	544 500	7500
M5	HUPO30	0,5-3,0	11,5	7,0	7,0	10,0	1,0	1,8	545 500	4000
M6	HUPO30	0,5-3,0	14,5	9,0	9,0	12,0	1,5	4,0	546 460	2500
	HUPO50	3,0-5,0	16,5					4,3	546 485*	2000
M8	HUPO30	0,5-3,0	16,0	11,0	11,0	15,0	1,5	6,1	548 250	1250
	HUPO55	3,0-5,5	18,5					6,4	548 270	1000
M10	HSPO35	0,8-3,5	21,5	13,0	13,0	17,0	1,5	10,0	540 632	750

** **Non-stock item:** minimum order quantity required after depletion of stock*

All dimensions in mm - Technical data subject to modification
Tolerances and characteristics see chapter 'Technical Information'

MADE IN BELGIUM EN 9100 CERTIFIED

Stainless Steel 304

Semi-hexagonal shank
Flat head
Closed end

HUPX / HSPX

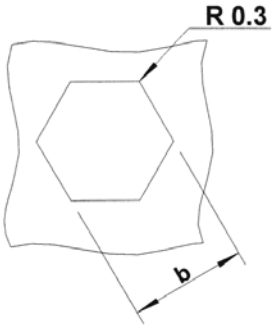

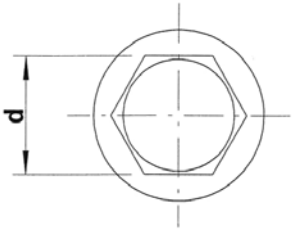

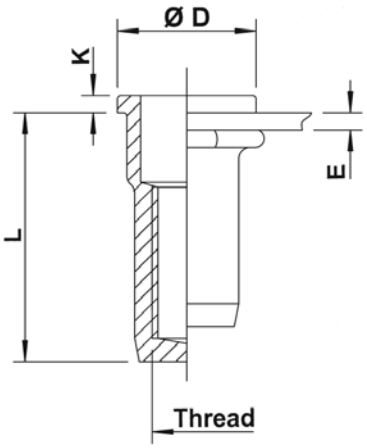

THREAD	TYPE	E = grip	L	$b^{+0,1}$ = hex hole	d = hex shank	D	K	kg/1000	ORDER CODE	BOX Q
M4	HUPX20	0,5-2,0	15,0	6,0	6,0	9,0	1,0	2,2	544 520	5000
M5	HUPX30	0,5-3,0	17,5	7,0	7,0	10,0	1,0	3,0	545 520	2500
M6	HUPX30	0,5-3,0	21,5	9,0	9,0	12,0	1,5	6,6	546 470	1500
	HUPX50	3,0-5,0	23,5					6,7	546 475	1250
M8	HUPX30	0,5-3,0	23,5	11,0	11,0	15,0	1,5	9,6	548 260	750
	HUPX55	3,0-5,5	26,0					10,0	548 280	1000
M10	HSPX35	0,8-3,5	28,5	13,0	13,0	17,0	1,5	14,7	540 635	500

All dimensions in mm - Technical data subject to modification
Tolerances and characteristics see chapter 'Technical Information'

MADE IN BELGIUM EN 9100 CERTIFIED

Stainless Steel 304

Semi-hexagonal shank
Low profile head
Open end

HUKO / HSKO

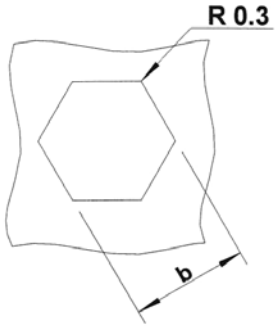

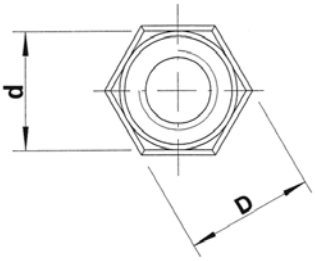

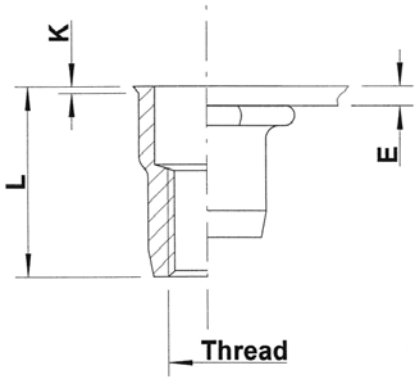

THREAD	TYPE	E = grip	L	$b^{+0,1}$ = hex hole	d = hex shank	D = hex head	K	kg/1000	ORDER CODE	BOX Q
M4	HUKO20	0,5-2,0	11,0	6,0	6,0	6,5	0,5	1,2	544 600	7500
M5	HUKO30	0,5-3,0	12,0	7,0	7,0	7,5	0,5	1,5	545 600	5000
	HUKO50	3,0-5,0	14,0					1,7	545 605	5000
M6	HUKO30	0,5-3,0	14,5	9,0	9,0	9,5	0,5	3,3	546 500	3000
	HUKO50	3,0-5,0	16,5					3,6	546 525	2500
	HUKO70	5,0-7,0	18,5					3,9	546 580	2000
M8	HUKO30	0,5-3,0	16,0	11,0	11,0	11,5	0,5	4,9	548 300	2000
	HUKO55	3,0-5,5	18,5					5,3	548 305	1500
M10	HSKO35	0,8-3,5	21,0	13,0	13,0	13,5	0,7	8,4	540 640	1000
	HSKO60	3,5-6,0	23,5					-	540 645*	-

**** Non-stock item:** minimum order quantity required after depletion of stock*

All dimensions in mm - Technical data subject to modification
Tolerances and characteristics see chapter 'Technical Information'

MADE IN BELGIUM EN 9100 CERTIFIED

Stainless Steel 304

Semi-hexagonal shank
Low profile head
Closed end

HUKX

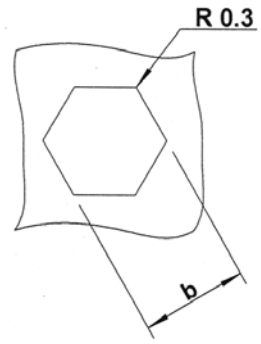

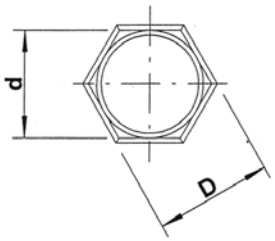

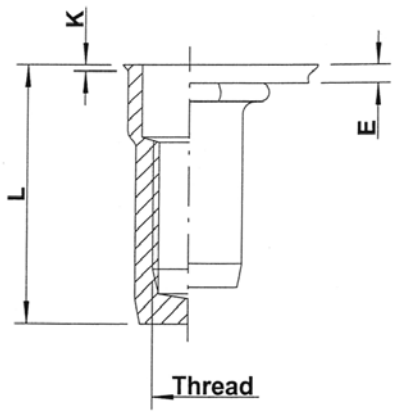

THREAD	TYPE	E = grip	L	$b^{+0,1}$ = hex hole	d = hex shank	D = hex head	K	kg/1000	ORDER CODE	BOX Q
M4	HUKX20	0,5-2,0	15,5	6,0	6,0	6,5	0,5	1,8	544 620	5000
M5	HUKX30	0,5-3,0	18,0	7,0	7,0	7,5	0,5	2,7	545 620	4000
	HUKX50	3,0-5,0	20,5					2,9	545 640	3000
M6	HUKX30	0,5-3,0	21,5	9,0	9,0	9,5	0,5	5,7	546 540	2000
	HUKX50	3,0-5,0	23,5					6,1	546 565	2000
M8	HUKX30	0,5-3,0	24,0	11,0	11,0	11,5	0,5	8,7	548 320	1000
	HUKX55	3,0-5,5	26,5					9,1	548 340	1000

***M10:** programme in progress*

All dimensions in mm - Technical data subject to modification
Tolerances and characteristics see chapter 'Technical Information'

MADE IN BELGIUM EN 9100 CERTIFIED

Stainless Steel 304

Semi-hexagonal shank
Flat head with underhead seal
Closed end

HX

watertight
10 bar (IP68[1])

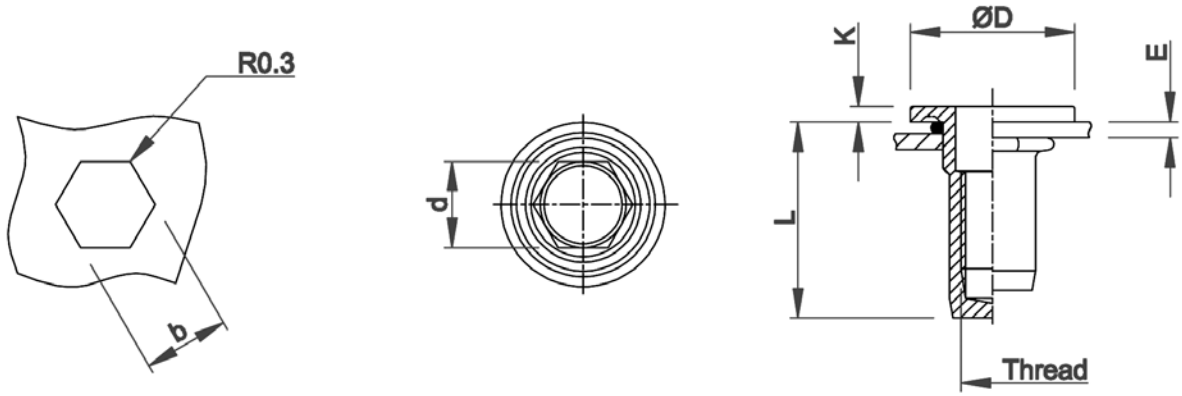

THREAD	TYPE	E = grip	L	$b^{+0,1}$ = hex hole	d = hex shank	D	K	kg/1000	ORDER CODE	BOX Q
M5	HX3001	0,5-3,0	19,0	7,0	7,0	13,5	1,5	3,8	545 905*	2500
M6	HX3001	0,5-3,0	21,5	9,0	9,0	16,0	1,5	7,5	546 903	1250
M8	HX3001	0,5-3,0	25,0	11,0	11,0	21,0	2,0	13,1	548 902	500

** **Non-stock item:** minimum order quantity required after depletion of stock*

All dimensions in mm - Technical data subject to modification
Tolerances and characteristics see chapter 'Technical Information'

General and technical information (seal, storage): see pg 61 and pg 80

[1] IP 68 guaranteed under Dejond test conditions

MADE IN BELGIUM EN 9100 CERTIFIED

Stainless Steel 304

Semi-hexagonal shank
Flat head with underhead seal
Closed end

HDPX

watertight IP67[1]

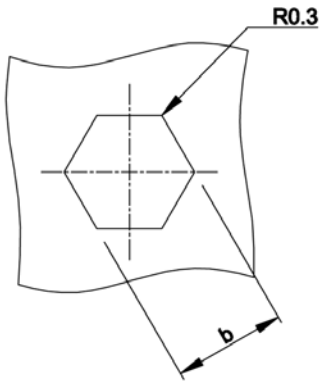

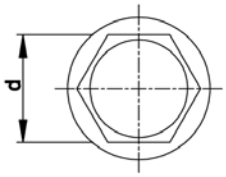

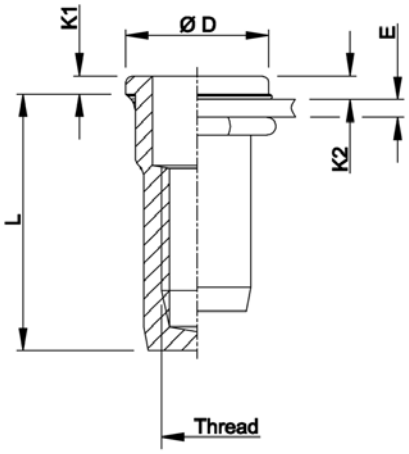

THREAD	TYPE	E = grip	L	$b^{+0,1}$ = hex hole	d = hex shank	D	K1	K2	kg/1000	ORDER CODE	BOX Q
M4	HDPX15	0,5-1,5	15,0	6,0	6,0	9,0	1,0	1,3	2,3	544 5205	5000
M5	HDPX20	0,5-2,0	17,5	7,0	7,0	10,0	1,0	1,3	3,1	545 5205	2500
M6	HDPX20	0,5-2,0	21,5	9,0	9,0	12,0	1,5	1,9	6,6	546 4705	1500
	HDPX40	2,0-4,0	23,5						6,8	546 4755	1500
M8	HDPX20	0,5-2,0	23,5	11,0	11,0	15,0	1,5	2,0	9,8	548 2605	1000
	HDPX45	2,0-4,5	26,0						10,2	548 2805	750

All dimensions in mm - Technical data subject to modification
Tolerances and characteristics see chapter "Technical Data" and *pg 60*

[1] IP 67 guaranteed under Dejond test conditions

K2: Reference values only. Several factors (seal thickness, hole size, setting force ...) influence head and seal thickness after installation.

MADE IN BELGIUM EN 9100 CERTIFIED

Stainless Steel 304

Round shank
Low profile head
Open end

UKO
UNIFIED THREAD

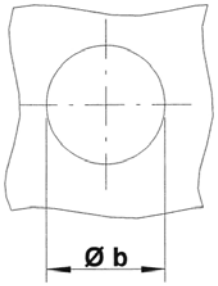

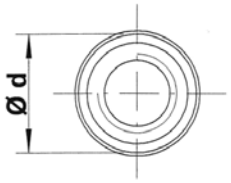

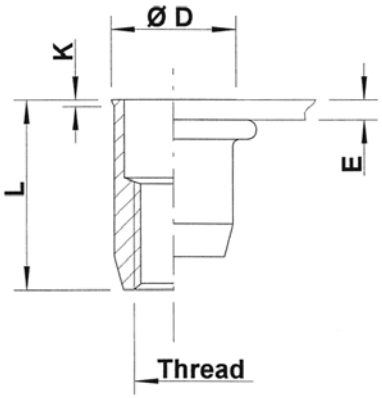

THREAD	TYPE	E = grip	L	$b^{+0,1}$ = drill dia	d = shank dia	D	K	kg/1000	ORDER CODE	BOX Q
10-32 UNF	UKO30	0,5-3,0	12,0	7,0	7,0	7,5	0,5	1,5	549 500	5000
1/4-20 UNC	UKO30	0,5-3,0	14,5	9,0	9,0	9,5	0,5	3,4	547 660	3000
5/16-18 UNC	UKO30	0,5-3,0	16,0	11,0	11,0	11,5	0,5	5,0	547 830	2000

All dimensions in mm

THREAD	TYPE	E = grip	L	$b^{+0.004}$ = drill dia	d = shank dia	D	K	lbs/1000	ORDER CODE	BOX Q
10-32 UNF	UKO30	.020-.118	0.472	0.276	0.276	0.295	.020	3.30	549 500	5000
1/4-20 UNC	UKO30	.020-.118	0.571	0.354	0.354	0.374	.020	7.49	547 660	3000
5/16-18 UNC	UKO30	.020-.118	0.630	0.433	0.433	0.453	.020	11.00	547 830	2000

All dimensions in inches - Technical data subject to modification
Tolerances and characteristics see chapter 'Technical Information'

MADE IN BELGIUM EN 9100 CERTIFIED

Stainless Steel 304

Semi-hexagonal shank
Low profile head
Open end

HUKO
UNIFIED THREAD

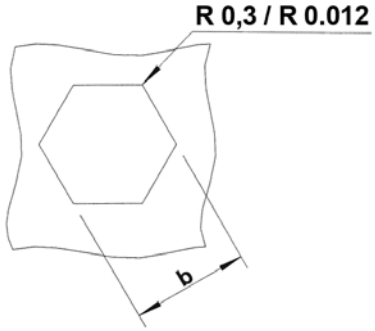

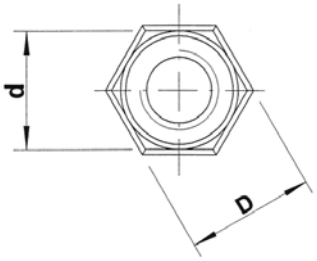

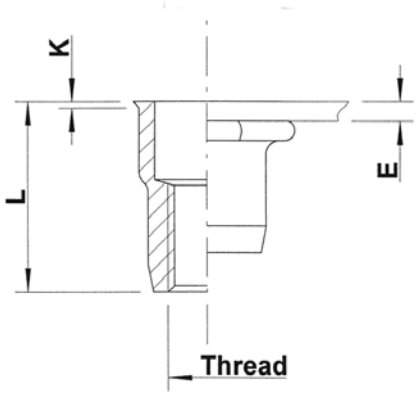

THREAD	TYPE	E = grip	L	$b^{+0,1}$ = hex hole	d = hex shank	D = hex head	K	kg/1000	ORDER CODE	BOX Q
10-32 UNF	HUKO30	0,5-3,0	12,0	7,0	7,0	7,5	0,5	1,5	549 530	5000
1/4-20 UNC	HUKO30	0,5-3,0	14,5	9,0	9,0	9,5	0,5	3,3	547 690	3000
5/16-18 UNC	HUKO30	0,5-3,0	16,0	11,0	11,0	11,5	0,5	4,9	547 850	2000

All dimensions in mm

THREAD	TYPE	E = grip	L	$b^{+0.004}$ = hex hole	d = hex shank	D = hex head	K	lbs/1000	ORDER CODE	BOX Q
10-32 UNF	HUKO30	.020-.118	0.472	0.276	0.276	0.295	.020	3.30	549 530	5000
1/4-20 UNC	HUKO30	.020-.118	0.571	0.354	0.354	0.374	.020	7.27	547 690	3000
5/16-18 UNC	HUKO30	.020-.118	0.630	0.433	0.433	0.453	.020	10.79	547 850	2000

All dimensions in inches - Technical data subject to modification
Tolerances and characteristics see chapter 'Technical Information'

MADE IN BELGIUM EN 9100 CERTIFIED

Stainless Steel 316

(contains > 2% Molybden)

Round shank
Flat head
Open end

UPO / SPO

extra high corrosion resistance

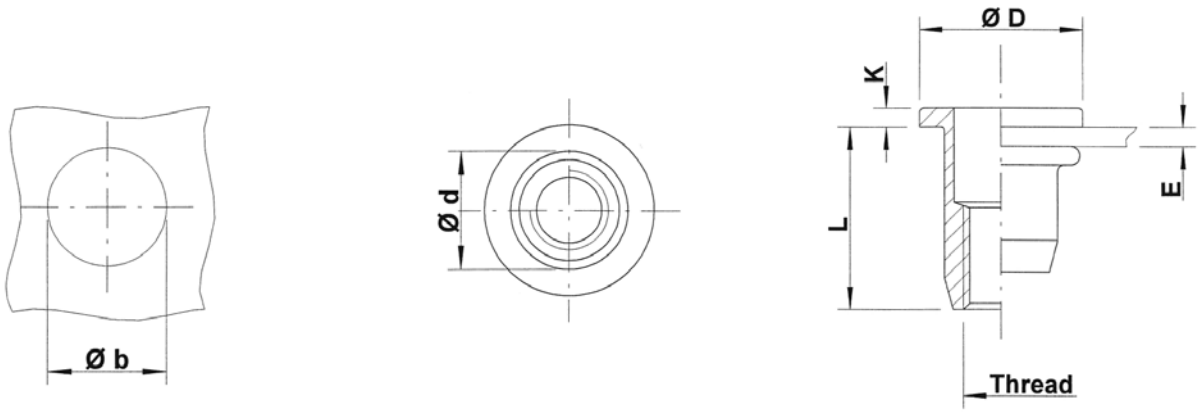

THREAD	TYPE	E = grip	L	$b^{+0,1}$ = drill dia	d = shank dia	D	K	kg/1000	ORDER CODE	BOX Q
M4	UPO20	0,5-2,0	11,0	6,0	6,0	9,0	1,0	1,5	554 010	3000
M5	UPO30	0,5-3,0	11,5	7,0	7,0	10,0	1,0	1,8	555 040	2000
M6	UPO30	0,5-3,0	14,5	9,0	9,0	12,0	1,5	4,1	556 020	1000
	UPO50	3,0-5,0	16,5					4,5	556 035	1000
	UPO70	5,0-7,0	18,5					4,7	556 050	750
M8	UPO30	0,5-3,0	16,0	11,0	11,0	15,0	1,5	6,1	558 010	500
	UPO55	3,0-5,5	18,5					6,5	558 020	500
	UPO70	4,5-7,0	20,0					6,9	558 030	500
M10	SPO35	0,8-3,5	21,5	13,0	13,0	17,0	1,5	10,4	550 600	250

All dimensions in mm - Technical data subject to modification
Tolerances and characteristics see chapter 'Technical Information'

MADE IN BELGIUM EN 9100 CERTIFIED

Stainless Steel 316

(contains > 2% Molybden)

Round shank
Flat head
Closed end

UPX

extra high corrosion resistance

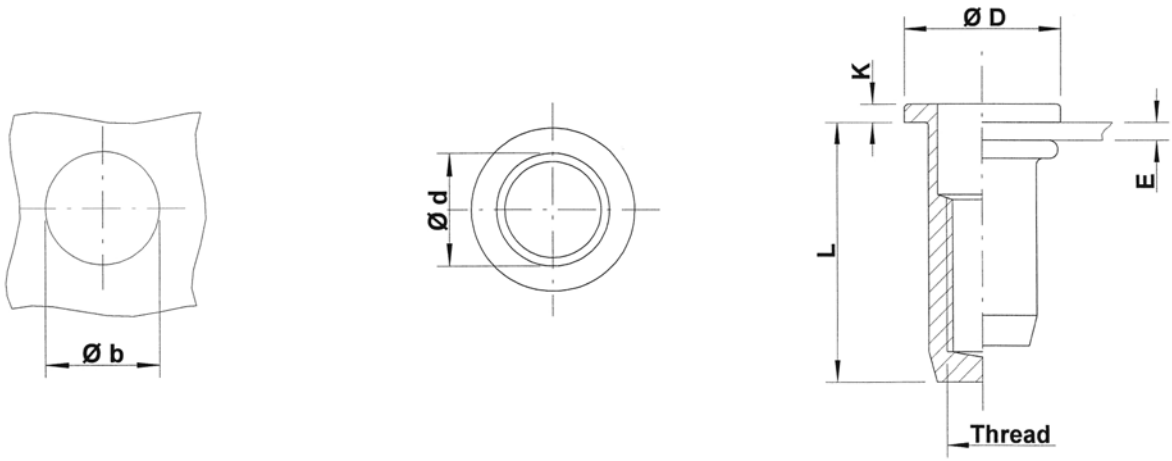

THREAD	TYPE	E = grip	L	$b^{+0,1}$ = drill dia	d = shank dia	D	K	kg/1000	ORDER CODE	BOX Q
M4	UPX20	0,5-2,0	15,0	6,0	6,0	9,0	1,0	2,2	554 110	1500
M5	UPX30	0,5-3,0	17,5	7,0	7,0	10,0	1,0	3,0	555 180	1500
	UPX50	3,0-5,0	19,5					3,2	555 185	-
M6	UPX30	0,5-3,0	21,5	9,0	9,0	12,0	1,5	6,6	556 100	750
	UPX50	3,0-5,0	23,5					6,9	556 105*	-
M8	UPX30	0,5-3,0	23,5	11,0	11,0	15,0	1,5	9,9	558 065	1000
	UPX55	3,0-5,5	26,0					10,2	558 066*	-

** **Non-stock item:** minimum order quantity required after depletion of stock*

***M10:** programme in progress*

All dimensions in mm - Technical data subject to modification
Tolerances and characteristics see chapter 'Technical Information'

MADE IN BELGIUM EN 9100 CERTIFIED

Stainless Steel 316

(contains > 2% Molybden)

Round shank
Countersunk head
Open end

UFO / SFO

extra high corrosion resistance

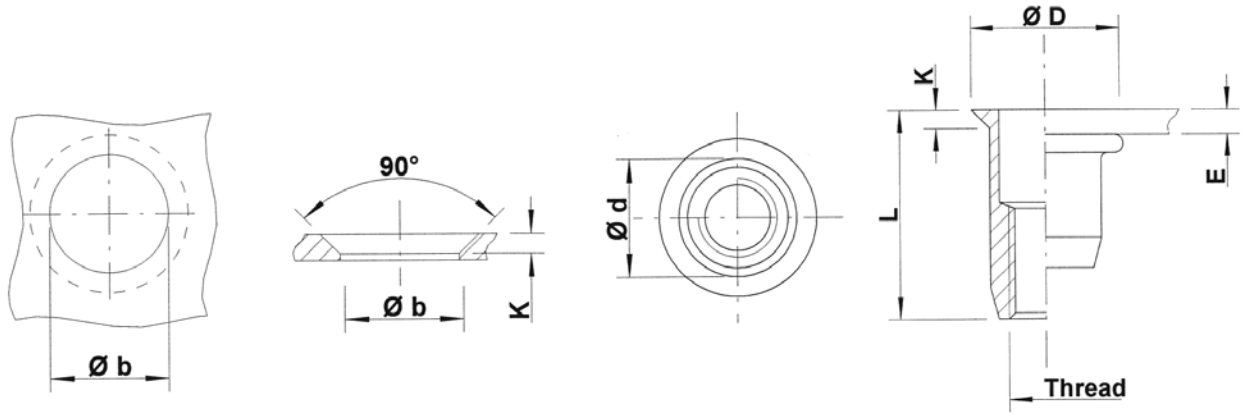

THREAD	TYPE	E = grip	L	$b^{+0,1}$ = drill dia	d = shank dia	D	K	kg/1000	ORDER CODE	BOX Q
M4	UFO30	1,2-3,0	12,0	6,0	6,0	8,0	1,0	1,3	554 120*	-
M5	UFO35	1,2-3,5	12,0	7,0	7,0	9,0	1,0	1,6	555 200	2000
M6	UFO45	1,7-4,5	17,0	9,0	9,0	12,0	1,5	4,2	556 125	1000
M8	UFO45	1,7-4,5	17,5	11,0	11,0	14,0	1,5	5,5	558 070	750
M10	SFO45	1,7-4,5	22,5	13,0	13,0	16,0	1,5	9,5	550 610*	-

** **Non-stock item:** minimum order quantity required after depletion of stock*

All dimensions in mm - Technical data subject to modification
Tolerances and characteristics see chapter 'Technical Information'

MADE IN BELGIUM EN 9100 CERTIFIED

Stainless Steel 316

(contains > 2% Molybden)

Round shank
Low profile head
Open end

UKO / SKO

extra high corrosion resistance

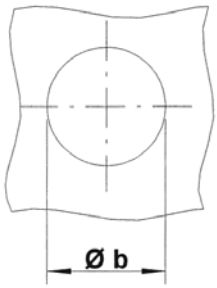

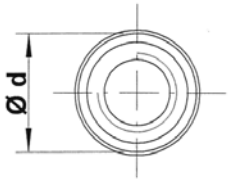

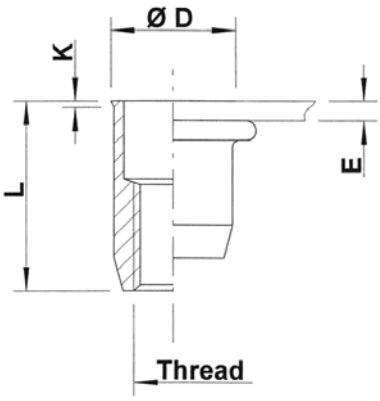

THREAD	TYPE	E = grip	L	$b^{+0,1}$ = drill dia	d = shank dia	D	K	kg/1000	ORDER CODE	BOX Q
M4	UKO20	0,5-2,0	11,0	6,0	6,0	6,5	0,5	1,2	554 220	3000
M5	UKO30	0,5-3,0	12,0	7,0	7,0	7,5	0,5	1,5	555 400	2000
M6	UKO30	0,5-3,0	14,5	9,0	9,0	9,5	0,5	3,4	556 400	1000
M8	UKO30	0,5-3,0	16,0	11,0	11,0	11,5	0,5	5,0	558 160	500
M10	SKO35	0,8-3,5	21,0	13,0	13,0	13,5	0,7	8,6	550 620	500

All dimensions in mm - Technical data subject to modification
Tolerances and characteristics see chapter 'Technical Information'

MADE IN BELGIUM EN 9100 CERTIFIED

Stainless Steel 316

(contains > 2% Molybden)

Round shank
Low profile head
Closed end

UKX

extra high corrosion resistance

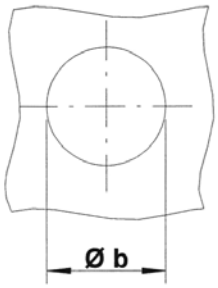

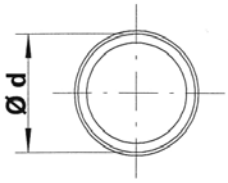

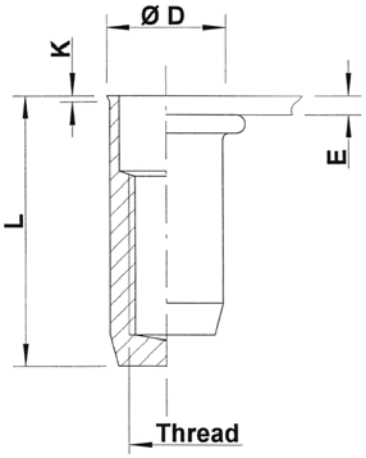

THREAD	TYPE	E = grip	L	$b^{+0,1}$ = drill dia	d = shank dia	D	K	kg/1000	ORDER CODE	BOX Q
M4	UKX20	0,5-2,0	15,5	6,0	6,0	6,5	0,5	1,9	554 250	2000
M5	UKX30	0,5-3,0	18,0	7,0	7,0	7,5	0,5	2,7	555 450	1500
M6	UKX30	0,5-3,0	21,5	9,0	9,0	9,5	0,5	5,8	556 450	1000
M8	UKX30	0,5-3,0	24,0	11,0	11,0	11,5	0,5	8,8	558 190	500

***M10:** programme in progress*

All dimensions in mm - Technical data subject to modification
Tolerances and characteristics see chapter 'Technical Information'

MADE IN BELGIUM EN 9100 CERTIFIED

Stainless Steel 316

(contains > 2% Molybden)

Round shank
Flat head with underhead seal
Closed end

DPX

watertight IP67[1]

extra high corrosion resistance

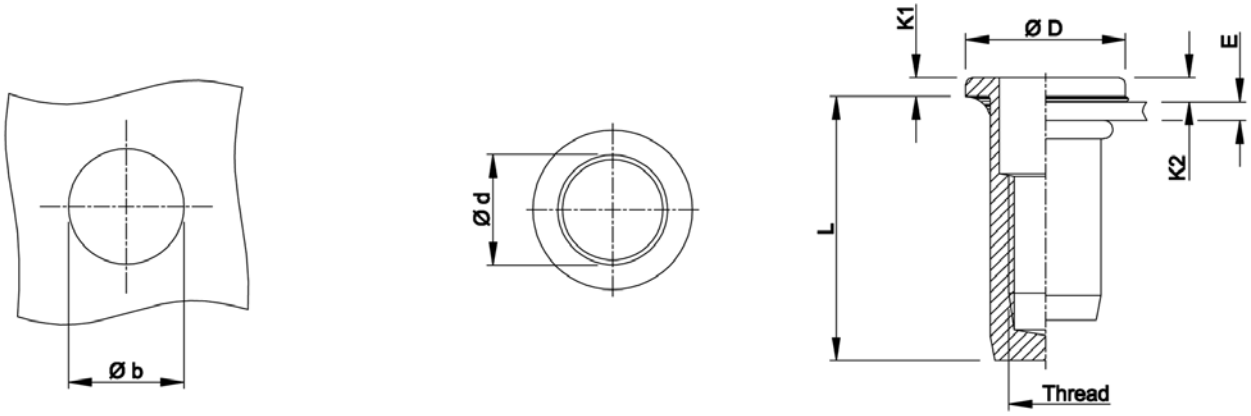

THREAD	TYPE	E = grip	L	b+0,1 = drill dia	d = shank dia	D	K1	K2	kg/1000	ORDER CODE	BOX Q
M4	DPX15	0,5-1,5	15,0	6,0	6,0	9,0	1,0	1,3	2,2	554 1105	1500
M5	DPX25 DPX45	0,5-2,5 2,5-4,5	17,5 19,5	7,0	7,0	10,0	1,0	1,3	3,0 3,2	555 1805 555 1855	1500 -
M6	DPX25	0,5-2,5	21,5	9,0	9,0	12,0	1,5	1,9	6,7	556 1005	750
M8	DPX25	0,5-2,5	23,5	11,0	11,0	15,0	1,5	2,0	9,9	558 0655	1000

All dimensions in mm - Technical data subject to modification
Tolerances and characteristics see chapter "Technical Data" and *pg 60*

[1] IP 67 guaranteed under Dejond test conditions

K2: Reference values only. Several factors (seal thickness, hole size, setting force ...) influence head and seal thickness after installation.

MADE IN BELGIUM EN 9100 CERTIFIED

Stainless Steel 316

(contains > 2% Molybden)

Semi-hexagonal shank
Flat head
Open end

HUPO / HSPO

extra high corrosion resistance

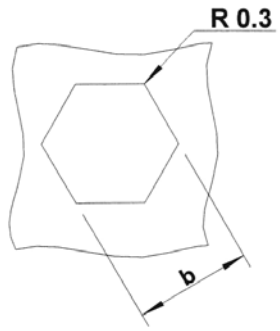

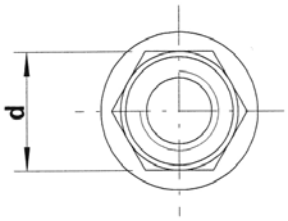

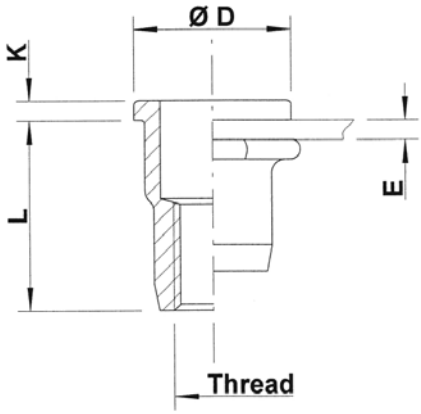

THREAD	TYPE	E = grip	L	$b^{+0,1}$ = hex hole	d = hex shank	D	K	kg/1000	ORDER CODE	BOX Q
M4	HUPO20	0,5-2,0	11,0	6,0	6,0	9,0	1,0	1,5	554 500	2500
M5	HUPO30	0,5-3,0	11,5	7,0	7,0	10,0	1,0	1,8	555 500	2000
M6	HUPO30	0,5-3,0	14,5	9,0	9,0	12,0	1,5	4,0	556 460	1000
	HUPO50	3,0-5,0	16,5					-	556 485*	-
M8	HUPO30	0,5-3,0	16,0	11,0	11,0	15,0	1,5	6,1	558 250	500
	HUPO55	3,0-5,5	18,5					6,4	558 270*	-
M10	HSPO35	0,8 - 3,5	21,5	13,0	13,0	17,0	1,5	10,1	550 632	400

** **Non-stock item:** minimum order quantity required after depletion of stock*

All dimensions in mm - Technical data subject to modification
Tolerances and characteristics see chapter 'Technical Information'

MADE IN BELGIUM EN 9100 CERTIFIED

Stainless Steel 316

(contains > 2% Molybden)

Semi-hexagonal shank
Flat head
Closed end

HUPX

extra high corrosion resistance

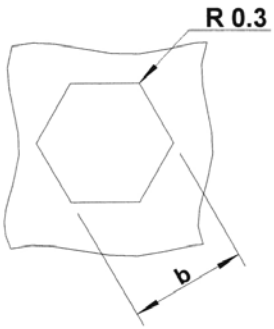

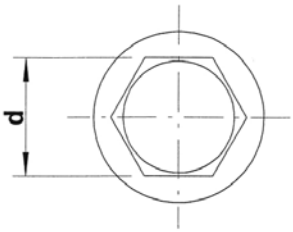

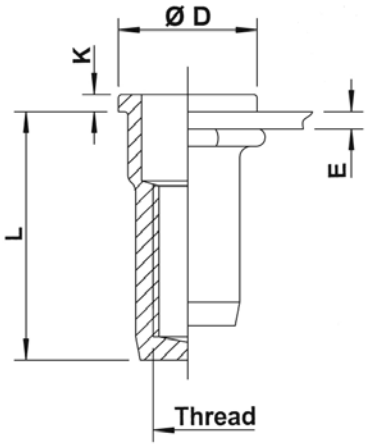

THREAD	TYPE	E = grip	L	$b^{+0,1}$ = hex hole	d = hex shank	D	K	kg/1000	ORDER CODE	BOX Q
M4	HUPX20	0,5-2,0	15,0	6,0	6,0	9,0	1,0	2,2	554 520	2000
M5	HUPX30	0,5-3,0	17,5	7,0	7,0	10,0	1,0	3,0	555 520	1500
M6	HUPX30	0,5-3,0	21,5	9,0	9,0	12,0	1,5	6,6	556 470	750
	HUPX50	3,0-5,0	23,5					6,7	556 475	750
M8	HUPX30	0,5-3,0	23,5	11,0	11,0	15,0	1,5	9,6	558 260	500
	HUPX55	3,0-5,5	26,0					10,0	558 280	500

***M10:** programme in progress*

All dimensions in mm - Technical data subject to modification
Tolerances and characteristics see chapter 'Technical Information'

MADE IN BELGIUM EN 9100 CERTIFIED

Stainless Steel 316

(contains > 2% Molybden)

Semi-hexagonal shank
Low profile head
Open end

HUKO / HSKO

extra high corrosion resistance

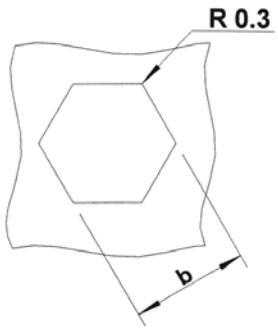

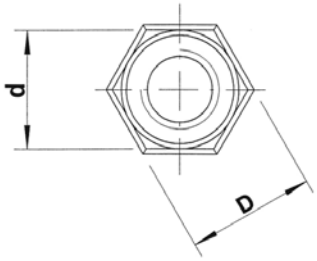

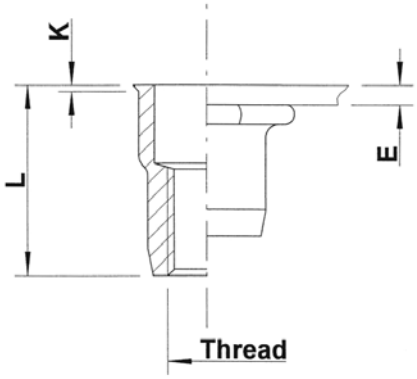

THREAD	TYPE	E = grip	L	$b^{+0,1}$ = hex hole	d = hex shank	D = hex head	K	kg/1000	ORDER CODE	BOX Q
M4	HUKO20	0,5-2,0	11,0	6,0	6,0	6,5	0,5	1,2	554 600	3000
M5	HUKO30	0,5-3,0	12,0	7,0	7,0	7,5	0,5	1,5	555 600	5000
M6	HUKO30	0,5-3,0	14,5	9,0	9,0	9,5	0,5	3,3	556 500	1000
	HUKO50	3,0-5,0	16,5					3,6	556 525*	-
M8	HUKO30	0,5-3,0	16,0	11,0	11,0	11,5	0,5	4,9	558 300	2000
	HUKO55	3,0-5,5	18,5					5,3	558 305*	-
M10	HSKO35	0,8-3,5	21,0	13,0	13,0	13,5	0,7	8,6	550 640	500
	HSKO60	3,5-6,0	23,5					9,3	550 645	300

** **Non-stock item:** minimum order quantity required after depletion of stock*

All dimensions in mm - Technical data subject to modification
Tolerances and characteristics see chapter 'Technical Information'

MADE IN BELGIUM EN 9100 CERTIFIED

Stainless Steel 316

(contains > 2% Molybden)

Semi-hexagonal shank
Low profile head
Closed end

HUKX

extra high corrosion resistance

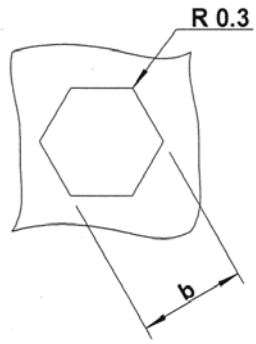

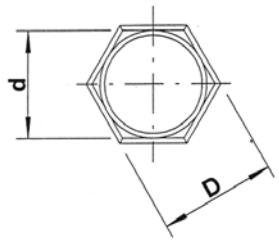

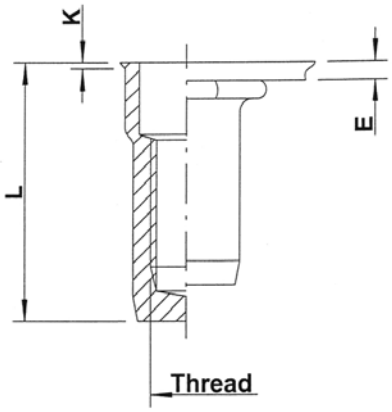

THREAD	TYPE	E = grip	L	$b^{+0,1}$ = hex hole	d = hex shank	D = hex head	K	kg/1000	ORDER CODE	BOX Q
M4	HUKX20	0,5-2,0	15,5	6,0	6,0	6,5	0,5	1,8	554 620	2500
M5	HUKX30	0,5-3,0	18,0	7,0	7,0	7,5	0,5	2,7	555 620	2000
	HUKX50	3,0-5,5	20,5					3,0	555 640	1500
M6	HUKX30	0,5-3,0	21,5	9,0	9,0	9,5	0,5	5,7	556 540	1000
	HUKX50	3,0-5,0	23,5					6,1	556 565*	-
M8	HUKX30	0,5-3,0	24,0	11,0	11,0	11,5	0,5	8,7	558 320	500
	HUKX55	3,0-5,5	26,5					9,1	558 340	500

** **Non-stock item:** minimum order quantity required after depletion of stock*

***M10:** programme in progress*

All dimensions in mm - Technical data subject to modification
Tolerances and characteristics see chapter 'Technical Information'

MADE IN BELGIUM EN 9100 CERTIFIED

Stainless Steel 316

(contains > 2% Molybden)

Semi-hexagonal shank
Flat head with underhead seal
Closed end

HX

watertight 10 bar (IP68[1])

extra high corrosion resistance

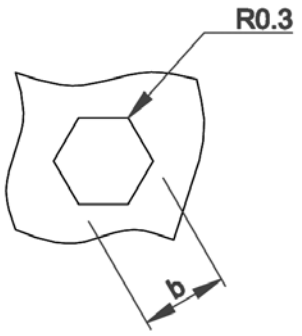

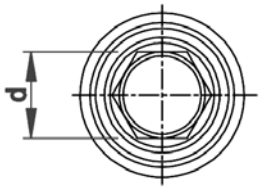

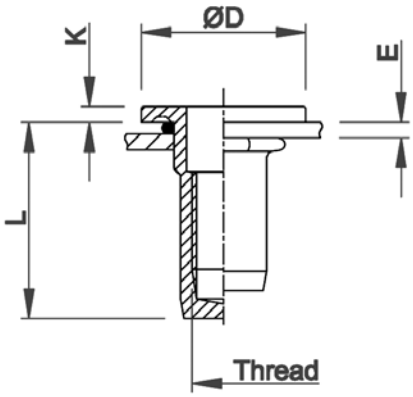

THREAD	TYPE	E = grip	L	$b^{+0,1}$ = hex hole	d = hex shank	D	K	kg/1000	ORDER CODE	BOX Q
M5	HX3001	0,5-3,0	19,0	7,0	7,0	13,5	1,5	3,8	555 905*	2500
M6	HX3001	0,5-3,0	21,5	9,0	9,0	16,0	1,5	7,5	556 903*	1250
M8	HX3001	0,5-3,0	25,0	11,0	11,0	21,0	2,0	13,1	558 902*	500

** **Non-stock item:** minimum order quantity required after depletion of stock*

All dimensions in mm - Technical data subject to modification
Tolerances and characteristics see chapter 'Technical Information'

*General and technical information (seal and storage): see pg 61 and **pg 80***

[1] IP68 guaranteed under Dejond test conditions

MADE IN BELGIUM EN 9100 CERTIFIED

Stainless Steel 316

(contains > 2% Molybden)

Semi-hexagonal shank
Flat head with underhead seal
Closed end

HDPX

watertight IP67[1]

extra high corrosion resistance

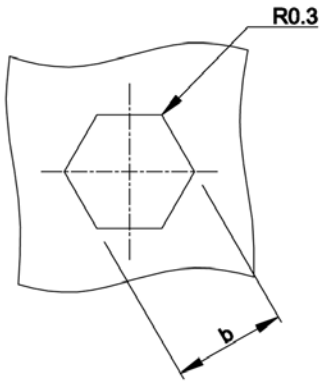

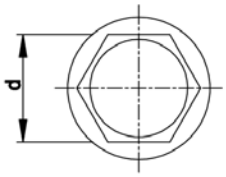

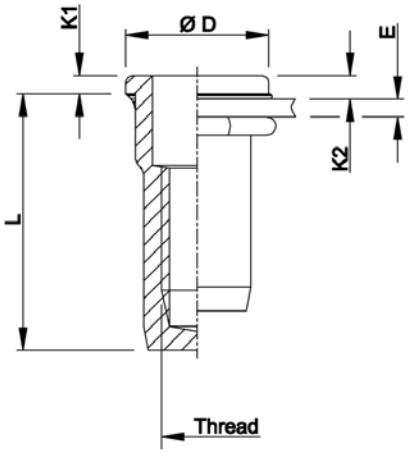

THREAD	TYPE	E = grip	L	$b^{+0,1}$ = hex hole	d = hex shank	D	K1	K2	kg/1000	ORDER CODE	BOX Q
M4	HDPX15	0,5-1,5	15,0	6,0	6,0	9,0	1,0	1,3	2,3	554 5205	2000
M5	HDPX20	0,5-2,0	17,5	7,0	7,0	10,0	1,0	1,3	3,1	555 5205	1500
M6	HDPX20	0,5-2,0	21,5	9,0	9,0	12,0	1,5	1,9	6,6	556 4705	750
	HDPX40	2,0-4,0	23,5						6,8	556 4755	750
M8	HDPX20	0,5-2,0	23,5	11,0	11,0	15,0	1,5	2,0	9,8	558 2605	500
	HDPX45	2,0-4,5	26,0						10,2	558 2805	500

All dimensions in mm - Technical data subject to modification
Tolerances and characteristics see chapter "Technical Data" and *pg 60*

[1] IP 67 guaranteed under Dejond test conditions

K2: Reference values only. Several factors (seal thickness, hole size, setting force ...) influence head and seal thickness after installation.

.

MADE IN BELGIUM EN 9100 CERTIFIED

Steel

Round shank
Flat head
Open end

Zinktop 480h, Cr^{VI} - free

UPO / SPO

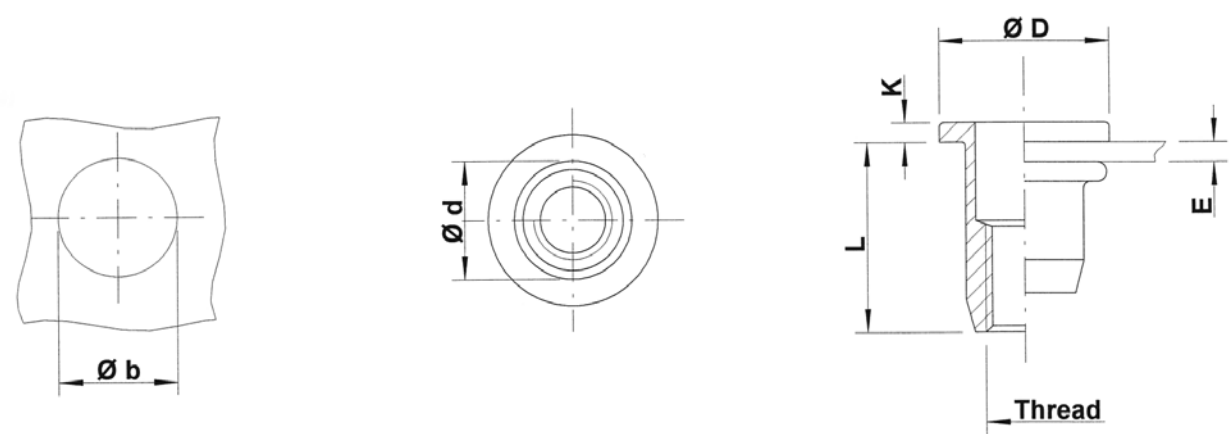

THREAD	TYPE	E = grip	L	$b^{+0,1}$ = drill dia	d = shank dia	D	K	kg/1000	ORDER CODE	BOX Q
M3	UPO20	0,5-2,0	9,75	5,0	5,0	8,0	0,75	1,0	523 029	10000
	UPO30	2,0-3,0	10,75					1,1	523 049	10000
M4	UPO30	0,5-3,0	10,75	6,0	6,0	10,0	0,75	1,5	524 029	5000
	UPO45	3,0-4,5	12,25					1,5	524 049	5000
M5	UPO30	0,5-3,0	12,0	7,0	7,0	11,0	1,0	2,1	525 029	4000
	UPO55	3,0-5,5	15,0					2,5	525 049	3000
M6	UPO30	0,5-3,0	14,5	9,0	9,0	13,0	1,5	4,3	526 029	2000
	UPO55	3,0-5,5	16,5					4,7	526 069	2000
	UPO80	5,5-8,0	19,0					5,0	526 089	1500
M8	UPO30	0,5-3,0	16,0	11,0	11,0	16,0	1,5	6,4	528 022	1250
	UPO55	3,0-5,5	18,5					7,0	528 069	1200
	UPO80	5,5-8,0	21,5					7,8	528 089	1000
M10	UPO35	0,8-3,5	19,75	12,5	12,4	18,5	2,25	9,8	520 029	750
	UPO60	3,5-6,0	22,75					10,8	520 049	700
M10	SPO35	0,8-3,5	21,0	13,0	13,0	19,0	2,0	11,4	520 609	750
	SPO60	3,5-6,0	24,0					12,1	520 629	500
M12	UPO40	1,0-4,0	25,0	16,0	16,0	23,0	2,0	19,6	522 029	400
	UPO70	4,0-7,0	28,0					21,1	522 059	300

All dimensions in mm - Technical data subject to modification
Tolerances and characteristics see chapter 'Technical Information'

MADE IN BELGIUM EN 9100 CERTIFIED

Steel

Round shank
Flat head
Closed end

Zinktop 480h, Cr^{VI} - free

UPX

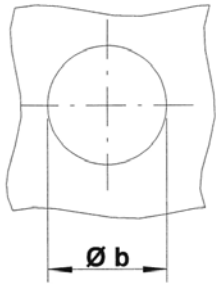

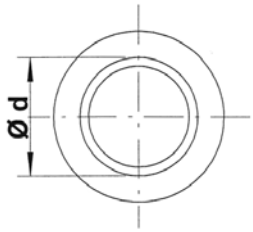

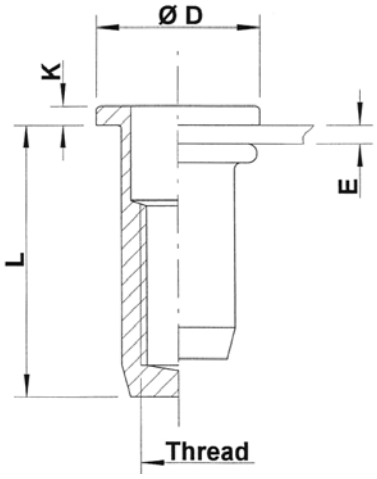

THREAD	TYPE	E = grip	L	$b^{+0,1}$ = drill dia	d = shank dia	D	K	kg/1000	ORDER CODE	BOX Q
M4	UPX30	0,5-3,0	14,75	6,0	6,0	10,0	0,75	2,1	524 189	5000
	UPX45	3,0-4,5	16,25					2,1	524 229*	4000
M5	UPX30	0,5-3,0	18,0	7,0	7,0	11,0	1,0	3,4	525 169	2500
	UPX55	3,0-5,5	20,5					3,6	525 189	2500
M6	UPX30	0,5-3,0	21,5	9,0	9,0	13,0	1,5	6,8	526 169	1500
	UPX55	3,0-5,5	24,5					7,5	526 209	1250
M8	UPX30	0,5-3,0	22,5	11,0	11,0	16,0	1,5	9,7	528 189	1000
	UPX55	3,0-5,5	25,5					10,9	528 209	750

**** Non-stock item:*** *minimum order quantity required after depletion of stock*

All dimensions in mm - Technical data subject to modification
Tolerances and characteristics see chapter 'Technical Information'

MADE IN BELGIUM EN 9100 CERTIFIED

Steel

Round shank
Countersunk head
Open end

Zinktop 480h, Cr^{VI} - free

UFO

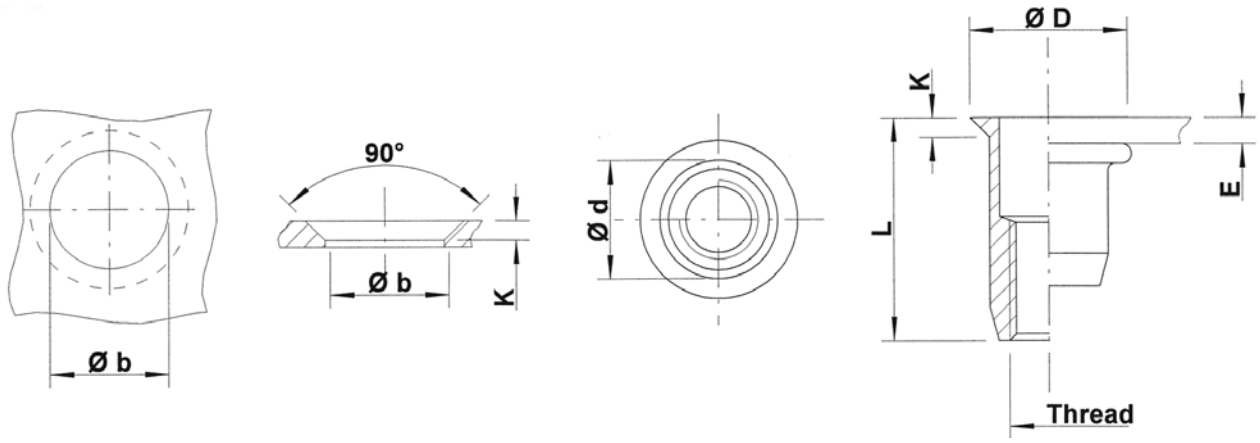

THREAD	TYPE	E = grip	L	$b^{+0,1}$ = drill dia	d = shank dia	D	K	kg/1000	ORDER CODE	BOX Q
M3	UFO35	1,7-3,5	11,25	5,0	5,0	8,0	1,5	1,1	523 209	10000
M4	UFO35	1,7-3,5	11,5	6,0	6,0	9,0	1,5	1,3	524 309	7500
	UFO50	3,5-5,0	13,0					1,5	524 329	5000
M5	UFO40	1,7-4,0	13,0	7,0	7,0	10,0	1,5	2,0	525 269	5000
	UFO65	4,0-6,5	16,0					2,3	525 289	4000
M6	UFO45	1,7-4,5	17,0	9,0	9,0	12,0	1,5	4,2	526 309	2000
	UFO65	4,5-6,5	19,0					4,7	526 329	2000
M8	UFO45	1,7-4,5	19,0	11,0	11,0	14,0	1,5	6,3	528 269	1250
	UFO65	4,5-6,5	21,0					7,0	528 289	1250
M10	UFO45	1,7-4,5	21,0	12,5	12,4	15,4	1,5	7,6	520 229	1000
	UFO65	4,5-6,5	23,0					8,2	520 249	750
M12	UFO45	2,0-4,5	26,0	16,0	16,0	19,0	1,8	16,9	522 269	500
	UFO75	4,5-7,5	29,0					18,0	522 289	400

All dimensions in mm - Technical data subject to modification
Tolerances and characteristics see chapter 'Technical Information'

MADE IN BELGIUM EN 9100 CERTIFIED

Steel

Countersunk head
Round shank
Closed end

Zinktop 480h, Cr^{VI} - free

UFX

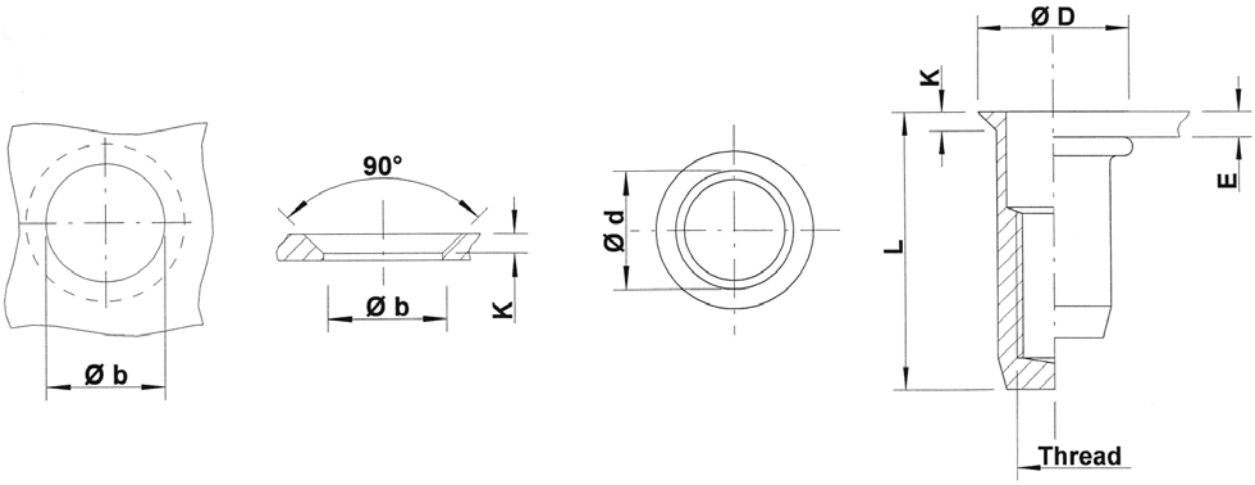

THREAD	TYPE	E = grip	L	$b^{+0,1}$ = drill dia	d = shank dia	D	K	kg/1000	ORDER CODE	BOX Q
M4	UFX35	1,7-3,5	15,5	6,0	6,0	9,0	1,5	2,0	524 449	5000
	UFX50	3,5-5,0	17,0					2,2	524 469*	5000
M5	UFX40	1,7-4,0	18,0	7,0	7,0	10,0	1,5	3,0	525 389	3000
	UFX65	4,0-6,5	20,5					3,4	525 409*	3000
M6	UFX45	1,7-4,5	22,0	9,0	9,0	12,0	1,5	6,1	526 409	1500
	UFX65	4,5-6,5	24,0					6,5	526 429*	1500
M8	UFX45	1,7-4,5	25,0	11,0	11,0	14,0	1,5	9,2	528 369	1000
	UFX65	4,5-6,5	28,0					10,1	528 389*	750

** **Non-stock item:** minimum order quantity required after depletion of stock*

All dimensions in mm - Technical data subject to modification
Tolerances and characteristics see chapter 'Technical Information'

MADE IN BELGIUM EN 9100 CERTIFIED

Steel

Round shank
Low profile head
Open end

Zinktop 480h, Cr^{VI} - free

UKO

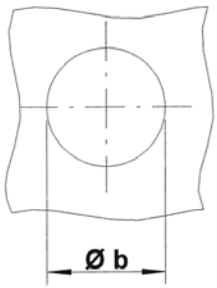

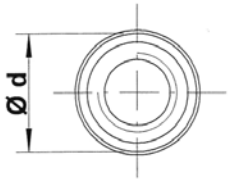

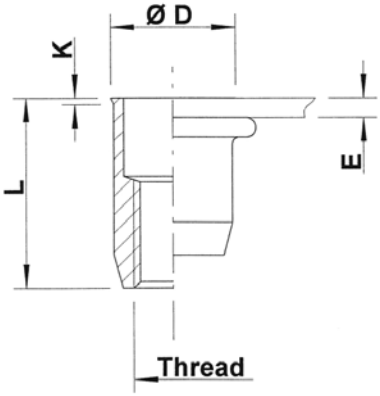

THREAD	TYPE	E = grip	L	$b^{+0,1}$ = drill dia	d = shank dia	D	K	kg/1000	ORDER CODE	BOX Q
M4	UKO30	0,5-3,0	10,75	6,0	6,0	6,5	0,5	1,1	524 529	10000
	UKO50	3,0-5,0	12,75					1,2	524 539	7500
M5	UKO30	0,5-3,0	12,0	7,0	7,0	7,5	0,5	1,6	525 469	5000
	UKO55	3,0-5,5	15,0					1,8	525 489	4000
M6	UKO30	0,5-3,0	14,5	9,0	9,0	9,5	0,5	3,4	526 469	3000
	UKO55	3,0-5,5	16,5					3,7	526 489	2500
M8	UKO30	0,5-3,0	16,0	11,0	11,0	11,5	0,5	5,0	528 449	2000
	UKO55	3,0-5,5	18,5					5,5	528 459	1500
M10	UKO35	0,8-3,5	19,5	12,5	12,4	12,9	0,5	6,7	520 459	1250

All dimensions in mm - Technical data subject to modification
Tolerances and characteristics see chapter 'Technical Information'

MADE IN BELGIUM EN 9100 CERTIFIED

Steel

Round shank
Low profile head
Closed end

Zinktop 480h, Cr^{VI} - free

UKX

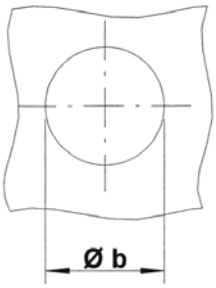

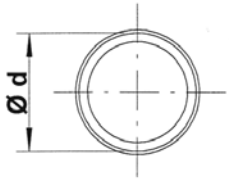

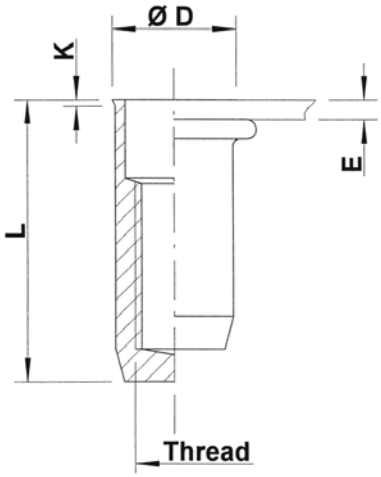

THREAD	TYPE	E = grip	L	$b^{+0,1}$ = drill dia	d = shank dia	D	K	kg/1000	ORDER CODE	BOX Q
M4	UKX30	0,5-3,0	15,0	6,0	6,0	6,5	0,5	1,8	524 579	5000
M5	UKX30	0,5-3,0	18,0	7,0	7,0	7,5	0,5	2,8	525 559	4000
M6	UKX30	0,5-3,0	21,5	9,0	9,0	9,5	0,5	5,8	526 519	2000
M8	UKX30	0,5-3,0	22,5	11,0	11,0	11,5	0,5	8,3	528 479	1250

All dimensions in mm - Technical data subject to modification
Tolerances and characteristics see chapter 'Technical Information'

MADE IN BELGIUM EN 9100 CERTIFIED

Steel

Round shank
Anti-turn head
Open end

Zinktop 480h, Cr^{VI} - free

ATO

easy repair solution: extra high torque-to-turn values

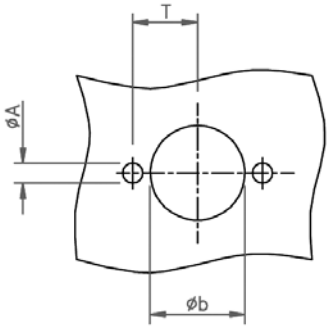

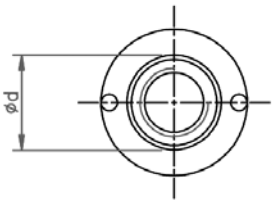

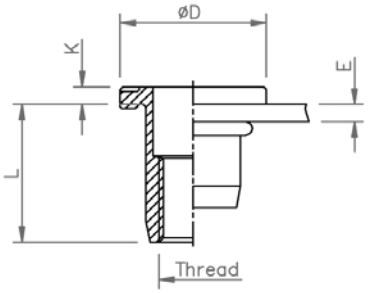

THREAD	TYPE	E = grip	L	b+0,1 = drill dia	d = shank dia	D	K	A	T	kg/ 1000	ORDER CODE	BOX Q
M6	ATO30	0,5-3,0	14,5	9,0	9,0	14,0	1,5	1,8	6,25	4,6	526 1029*	1750
M8	ATO30	0,5-3,0	16,0	11,0	11,0	17,0	2,0	2,3	7,5	7,4	528 1022*	1200
M10	ATO35	0,8-3,5	21,0	13,0	13,0	19,0	2,0	3,0	8,75	11,4	520 1609*	750

Tool to position Ø A:

M6	AT 206
M8	AT 208
M10	AT 210

Samples available from stock

All dimensions in mm - Technical data subject to modification
Tolerances and characteristics see chapter 'Technical Information'

MADE IN BELGIUM EN 9100 CERTIFIED

Steel

Knurled shank
Flat head
Open end

Zinktop 480h, Cr^{VI} - free

UPO KN

improved nominal knurl

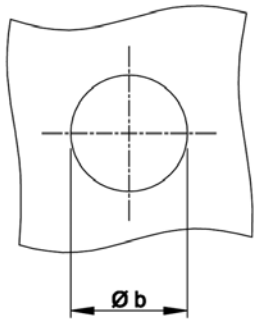

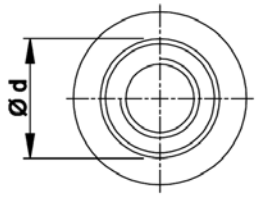

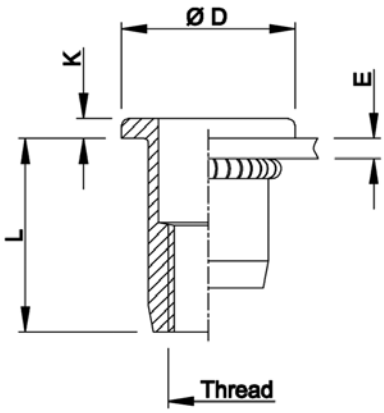

THREAD	TYPE	E = grip	L	$b^{+0,1}$ = drill dia	d = shank dia	D	K	kg/1000	ORDER CODE	BOX Q
M4	UPO30 KN	0,5-3,0	10,75	6,0	6,0	10,0	0,75	1,5	524 0297*	5000
	UPO45 KN	3,0-4,5	12,25					1,5	524 0497*	5000
M5	UPO30 KN	0,5-3,0	12,0	7,0	7,0	11,0	1,0	2,1	525 0297*	4000
	UPO55 KN	3,0-5,5	15,0					2,5	525 0497*	3000
M6	UPO30 KN	0,5-3,0	14,5	9,0	9,0	13,0	1,5	4,3	526 0297	2000
	UPO55 KN	3,0-5,5	16,5					4,7	526 0697*	2000
M8	UPO30 KN	0,5-3,0	16,0	11,0	11,0	16,0	1,5	6,4	528 0227	1250
	UPO55 KN	3,0-5,5	18,5					7,0	528 0697*	1250

** **Non-stock item:** minimum order quantity required after depletion of stock*

KN programme in progress (also UFO version)

All dimensions in mm - Technical data subject to modification
Tolerances and characteristics see chapter 'Technical Information'

MADE IN BELGIUM EN 9100 CERTIFIED

Steel

Knurled shank
Low profile head
Open end

Zinktop 480h, Cr^{VI} - free

UKO KN

improved nominal knurl

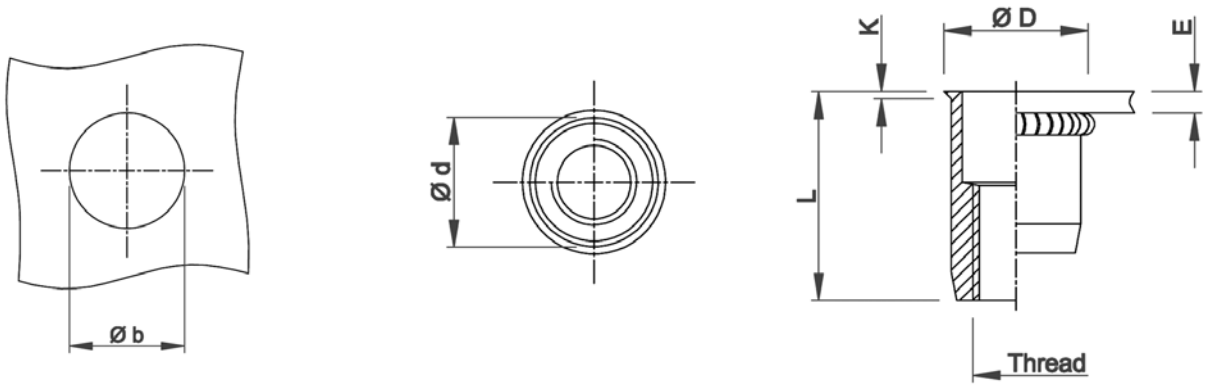

THREAD	TYPE	E = grip	L	$b^{+0,1}$ = drill dia	d = shank dia	D	K	kg/1000	ORDER CODE	BOX Q
M4	UKO30 KN	0,5-3,0	10,75	6,0	6,0	6,5	0,5	1,1	524 5297	10000
	UKO50 KN	3,0-5,0	12,75					1,2	524 5397*	7500
M5	UKO30 KN	0,5-3,0	12,0	7,0	7,0	7,5	0,5	1,6	525 4697	5000
	UKO55 KN	3,0-5,5	15,0					1,8	525 4897*	4000
M6	UKO30 KN	0,5-3,0	14,5	9,0	9,0	9,5	0,5	3,4	526 4697	3000
	UKO55 KN	3,0-5,5	16,5					3,7	526 4897*	2500
M8	UKO30 KN	0,5-3,0	16,0	11,0	11,0	11,5	0,5	5,0	528 4497*	2000
	UKO55 KN	3,0-5,5	18,5					5,5	528 4597*	1500

** **Non-stock item:** minimum order quantity required after depletion of stock*

KN programme in progress (also UFO version)

All dimensions in mm - Technical data subject to modification
Tolerances and characteristics see chapter 'Technical Information'

MADE IN BELGIUM EN 9100 CERTIFIED

Steel

Full-hexagonal shank
Flat head
Open end

Zinktop 480h, Cr^{VI} - free

HUPO / HSPO

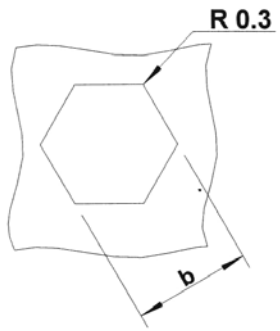

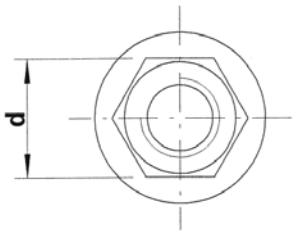

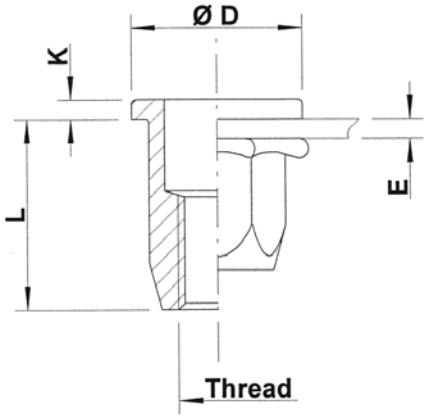

THREAD	TYPE	E = grip	L	$b^{+0,1}$ = hex hole	d = hex shank	D	K	kg/1000	ORDER CODE	BOX Q
M4	HUPO20	0,5-2,0	10,0	6,0	6,0	9,0	1,0	1,4	524 589	7000
M5	HUPO30	0,5-3,0	13,0	7,0	7,0	10,0	1,0	2,3	525 569	4000
M6	HUPO30	0,5-3,0	14,5	9,0	9,0	13,0	1,5	4,7	526 529	2000
	HUPO55	3,0-5,5	16,5					4,8	526 549	1750
M8	HUPO30	0,5-3,0	16,5	11,0	11,0	16,0	1,5	7,0	528 482	1200
	HUPO55	3,0-5,5	19,0					7,5	528 509	1000
	HUPO80	5,5-8,0	22,0					8,1	528 609	750
M10	HSPO35	0,8-3,5	21,0	13,0	13,0	19,0	2,0	11,6	520 649	700
	HSPO60	3,5-6,0	23,5					12,3	520 659	500

All dimensions in mm - Technical data subject to modification
Tolerances and characteristics see chapter 'Technical Information'

Semi-hexagonal programme available on demand

MADE IN BELGIUM EN 9100 CERTIFIED

Steel

Semi-hexagonal shank
Flat head
Open end

Zinktop 480h, Cr^{VI} - free

HUPO

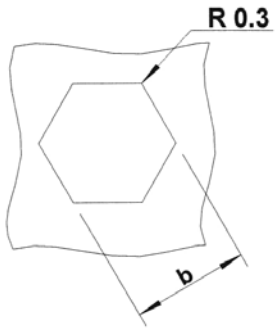

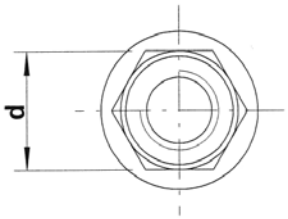

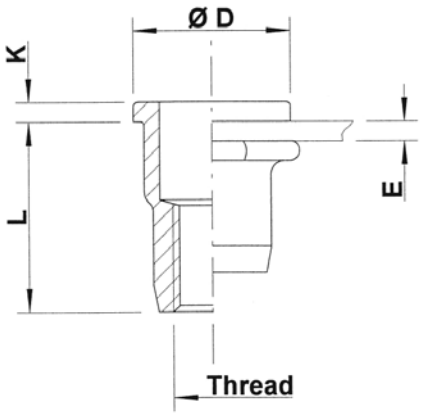

THREAD	TYPE	E = grip	L	$b^{+0,1}$ = hex hole	d = hex shank	D	K	kg/1000	ORDER CODE	BOX Q
M12	HUPO40	1,0-4,0	25,0	16,0	16,0	23,0	2,0	19,6	522 509	350

All dimensions in mm - Technical data subject to modification
Tolerances and characteristics see chapter 'Technical Information'

MADE IN BELGIUM EN 9100 CERTIFIED

Steel

Full-hexagonal shank
Flat head
Closed end

Zinktop 480h, Cr^{VI} - free

HUPX / HSPX

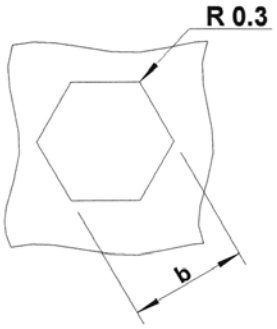

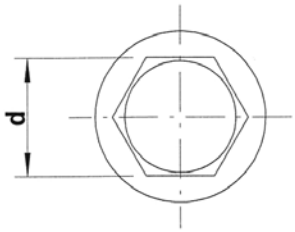

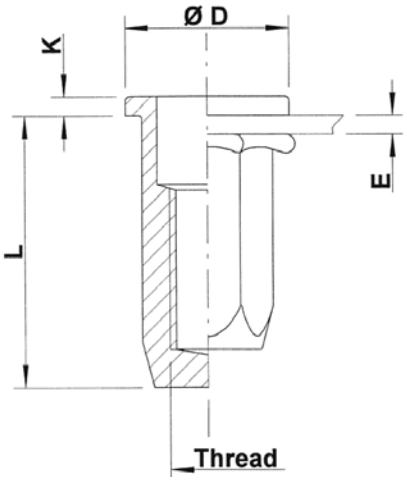

THREAD	TYPE	E = grip	L	$b^{+0,1}$ = hex hole	d = hex shank	D	K	kg/1000	ORDER CODE	BOX Q
M4	HUPX20	0,5-2,0	14,5	6,0	6,0	9,0	1,0	2,2	524 609	5000
M5	HUPX30	0,5-3,0	19,0	7,0	7,0	10,0	1,0	3,6	525 589	2500
	HUPX55	3,0-5,5	21,5					3,9	525 599*	2500
M6	HUPX30	0,5-3,0	21,5	9,0	9,0	13,0	1,5	7,4	526 569	1500
	HUPX55	3,0-5,5	23,5					7,6	526 579	1500
M8	HUPX30	0,5-3,0	24,5	11,0	11,0	16,0	1,5	11,6	528 529	750
	HUPX55	3,0-5,5	27,0					12,2	528 539	700
M10	HSPX35	0,8-3,5	31,0	13,0	13,0	19,0	2,0	19,0	520 654	400
	HSPX60	3,5-6,0	33,5					19,4	520 658	400

** **Non-stock item:** minimum order quantity required after depletion of stock*

All dimensions in mm - Technical data subject to modification
Tolerances and characteristics see chapter 'Technical Information'

Semi-hexagonal programme available on demand

MADE IN BELGIUM EN 9100 CERTIFIED

Steel

Full-hexagonal shank
Low profile head
Open end

Zinktop 480h, Cr^{VI} - free

HUKO / HSKO

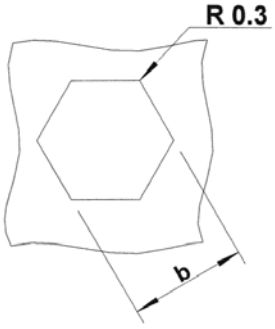

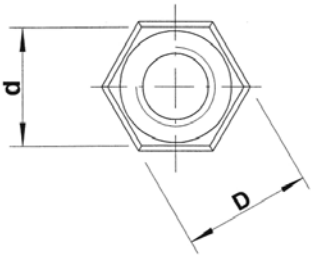

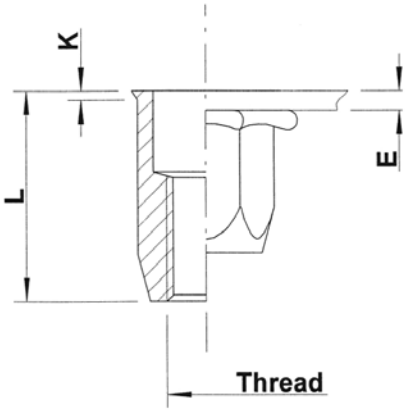

THREAD	TYPE	E = grip	L	$b^{+0,1}$ = hex hole	d = hex shank	D = hex head	K	kg/1000	ORDER CODE	BOX Q
M4	HUKO20	0,5-2,0	11,0	6,0	6,0	6,6	0,6	1,2	524 629	7500
M5	HUKO30	0,5-3,0	14,0	7,0	7,0	7,7	0,6	2,0	525 609	5000
	HUKO55	3,0-5,5	16,5					2,3	525 629	4000
M6	HUKO30	0,5-3,0	16,0	9,0	9,0	9,8	0,7	4,2	526 589	2500
	HUKO55	3,0-5,5	18,5					4,6	526 609	2000
M8	HUKO30	0,5-3,0	18,0	11,0	11,0	11,8	0,7	6,2	528 549	1250
	HUKO55	3,0-5,5	20,5					6,9	528 569	1250
M10	HSKO35	0,8-3,5	23,0	13,0	13,0	13,8	0,7	10,5	520 669	750
	HSKO60	3,5-6,0	25,5					11,0	520 679	700

All dimensions in mm - Technical data subject to modification
Tolerances and characteristics see chapter 'Technical Information'

Semi-hexagonal programme available on demand

MADE IN BELGIUM EN 9100 CERTIFIED

Steel

Full-hexagonal shank
Low profile head
Closed end

Zinktop 480h, Cr^{VI} - free

HUKX

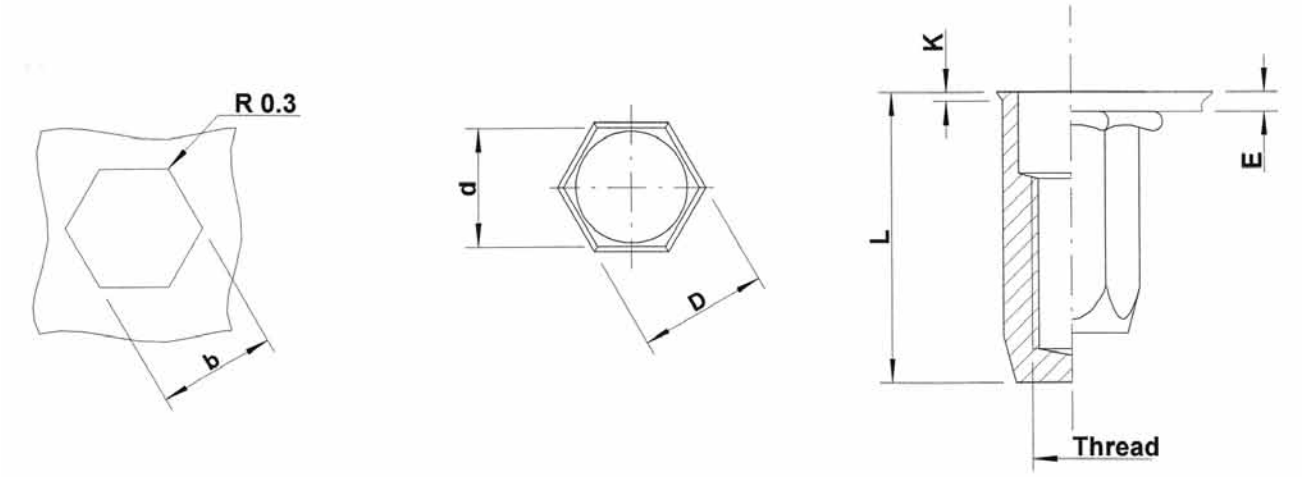

THREAD	TYPE	E = grip	L	$b^{+0,1}$ = hex hole	d = hex shank	D = hex head	K	kg/1000	ORDER CODE	BOX Q
M4	HUKX20	0,5-2,0	15,5	6,0	6,0	6,6	0,6	2,0	524 649	5000
M5	HUKX30	0,5-3,0	20,0	7,0	7,0	7,7	0,6	3,3	525 649	3000
M6	HUKX30	0,5-3,0	22,0	9,0	9,0	9,8	0,7	6,6	526 629	1750
M8	HUKX30	0,5-3,0	25,0	11,0	11,0	11,8	0,7	10,5	528 589	1000

All dimensions in mm - Technical data subject to modification
Tolerances and characteristics see chapter 'Technical Information'

Semi-hexagonal programme available on demand

MADE IN BELGIUM EN 9100 CERTIFIED

Steel

Full-hexagonal shank
Flat head with underhead seal
Closed end

Zinktop 480h, Cr^{VI} - free

HX

watertight
10 bar (IP68[1])

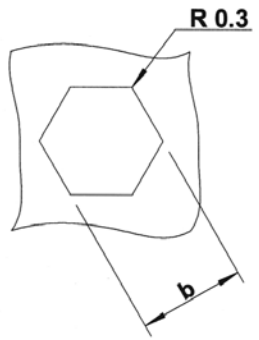

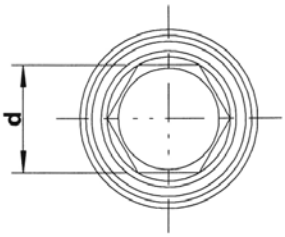

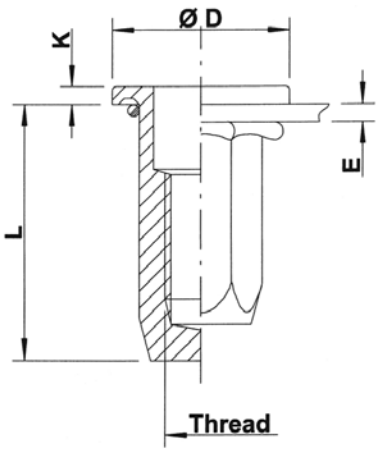

THREAD	TYPE	E = grip	L	$b^{+0,1}$ = hex hole	d = hex shank	D	K	kg/1000	ORDER CODE	BOX Q
M5	HX3001	0,5-3,0	19,0	7,0	7,0	12,5	1,5	4,3	525 925*	2500
M6	HX3001	0,5-3,0	21,5	9,0	9,0	15,0	1,5	8,0	526 942	1250
M8	HX3001	0,5-3,0	26,7	11,0	11,0	20,0	2,0	14,8	528 935	500

** **Non-stock item:** minimum order quantity required after depletion of stock*

All dimensions in mm - Technical data subject to modification
Tolerances and characteristics see chapter 'Technical Information'

General and technical information (seal and storage): see pg 61 and pg 80

[1] IP 68 guaranteed under Dejond test conditions

MADE IN BELGIUM EN 9100 CERTIFIED

Steel

Splined shank
Flat head
Open end

Zinktop 480h, Cr^{VI} - free

UPO RS

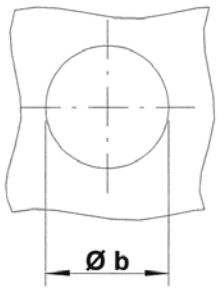

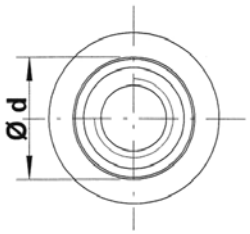

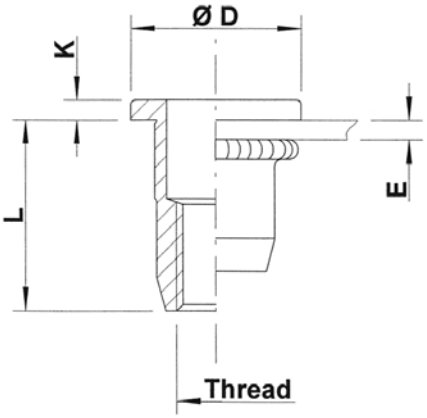

THREAD	TYPE	E = grip	L	$b^{+0,1}$ = drill dia	d = splined shank	D	K	kg/1000	ORDER CODE	BOX Q
M4	UPO30 RS	0,5-3,0	10,75	6,4	6,3	10,0	0,75	1,5	524 709	5000
	UPO45 RS	3,0-4,5	12,25					1,6	524 729*	5000
M5	UPO30 RS	0,5-3,0	12,0	7,4	7,3	11,0	1,0	2,2	525 709	4000
	UPO55 RS	3,0-5,5	15,0					2,6	525 729	3000
M6	UPO30 RS	0,5-3,0	14,5	9,4	9,3	13,0	1,5	4,4	526 709	2000
	UPO55 RS	3,0-5,5	16,5					4,7	526 729	2000
M8	UPO30 RS	0,5-3,0	16,0	11,5	11,4	16,0	1,5	6,5	528 709	1250
	UPO55 RS	3,0-5,5	18,5					7,1	528 729	1200
M10	UPO35 RS	0,8-3,5	19,75	13,0	12,9	18,5	2,25	10,0	520 709	750
	UPO60 RS	3,5-6,0	22,75					10,8	520 729	700

** **Non-stock item:** minimum order quantity required after depletion of stock*

All dimensions in mm - Technical data subject to modification
Tolerances and characteristics see chapter 'Technical Information'

MADE IN BELGIUM EN 9100 CERTIFIED

Steel

Splined shank
Countersunk head
Open end

Zinktop 480h, Cr^{VI} - free

UFO RS

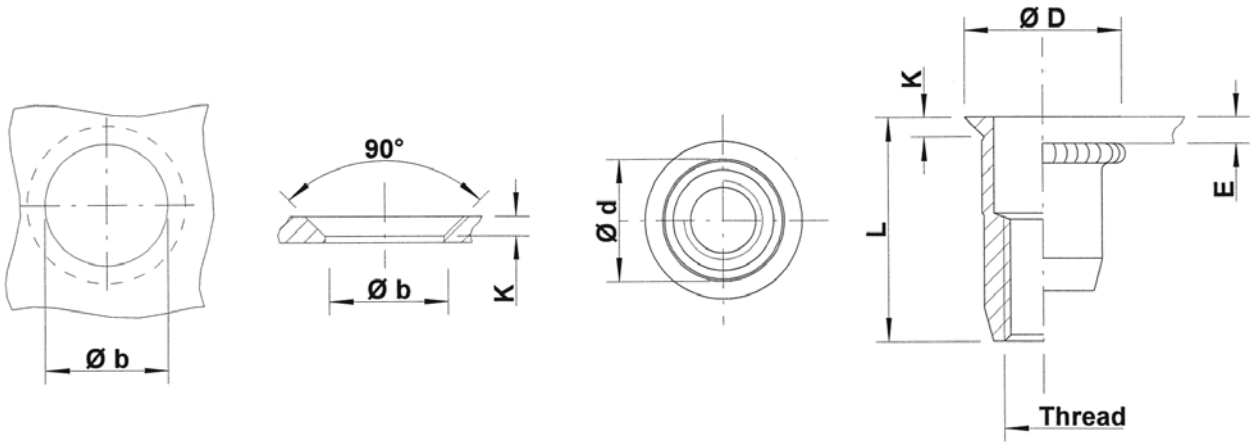

THREAD	TYPE	E = grip	L	$b^{+0,1}$ = drill dia	d = splined shank	D	K	kg/1000	ORDER CODE	BOX Q
M4	UFO35 RS	1,7-3,5	11,5	6,4	6,3	9,0	1,5	1,4	524 749	7500
	UFO50 RS	3,5-5,0	13,0					1,5	524 769*	5000
M5	UFO40 RS	1,7-4,0	13,0	7,4	7,3	10,0	1,5	2,1	525 749	5000
	UFO65 RS	4,0-6,5	16,0					2,4	525 769*	4000
M6	UFO45 RS	1,7-4,5	17,0	9,4	9,3	12,0	1,5	4,4	526 769	2000
	UFO65 RS	4,5-6,5	19,0					4,7	526 789	2000
M8	UFO45 RS	1,7-4,5	19,0	11,5	11,4	14,0	1,5	6,4	528 749	1250
	UFO65 RS	4,5-6,5	21,0					6,8	528 769	1250
M10	UFO45 RS	1,7-4,5	21,0	13,0	12,9	15,4	1,5	7,9	520 749	750
	UFO65 RS	4,5-6,5	23,0					8,5	520 769	750

** **Non-stock item:** minimum order quantity required after depletion of stock*

All dimensions in mm - Technical data subject to modification
Tolerances and characteristics see chapter 'Technical Information'

MADE IN BELGIUM EN 9100 CERTIFIED

Aluminium

Round shank
Flat head
Open end

UPO

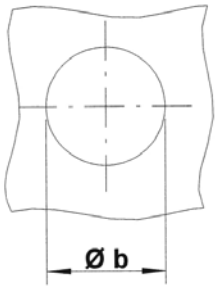

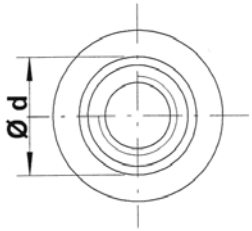

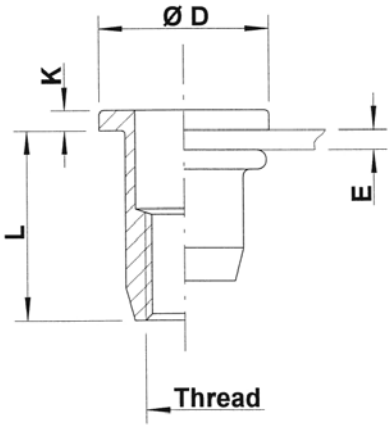

THREAD	TYPE	E = grip	L	$b^{+0,1}$ = drill dia	d = shank dia	D	K	kg/1000	ORDER CODE	BOX Q
M3	UPO20	0,5-2,0	9,75	5,0	5,0	8,0	0,75	0,4	513 050	10000
	UPO30	2,0-3,0	10,75					0,4	513 100	10000
M4	UPO30	0,5-3,0	10,75	6,0	6,0	10,0	0,75	0,5	514 025	5000
	UPO45	3,0-4,5	12,25					0,5	514 050	5000
M5	UPO30	0,5-3,0	12,0	7,0	7,0	11,0	1,0	0,7	515 025	4000
	UPO55	3,0-5,5	15,0					0,8	515 050	3000
M6	UPO30	0,5-3,0	14,5	9,0	9,0	13,0	1,5	1,5	516 025	2000
	UPO55	3,0-5,5	16,5					1,6	516 075	2000
	UPO80	5,5-8,0	19,0					1,7	516 090*	1500
M8	UPO30	0,5-3,0	16,0	11,0	11,0	16,0	1,5	2,2	518 025	1250
	UPO55	3,0-5,5	18,5					2,4	518 050	1250
	UPO80	5,5-8,0	21,5					2,6	518 055*	1000
M10	UPO35	0,8-3,5	19,75	12,5	12,4	18,5	2,25	3,3	510 025	750
	UPO60	3,5-6,0	22,75					3,6	510 050*	700

** **Non-stock item:** minimum order quantity required after depletion of stock*

All dimensions in mm - Technical data subject to modification
Tolerances and characteristics see chapter 'Technical Information'

MADE IN BELGIUM EN 9100 CERTIFIED

Aluminium

Round shank
Flat head
Closed end

UPX

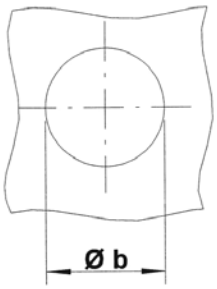

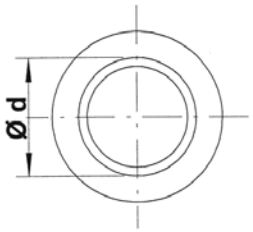

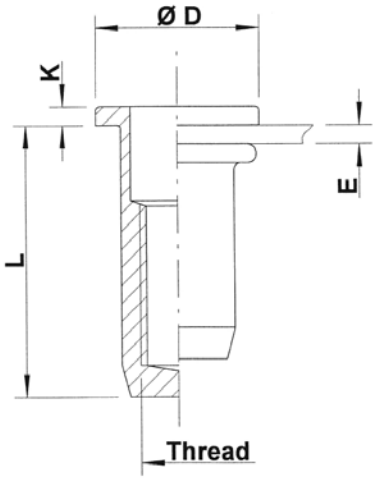

THREAD	TYPE	E = grip	L	$b^{+0,1}$ = drill dia	d = shank dia	D	K	kg/1000	ORDER CODE	BOX Q
M3	UPX20	0,5-2,0	13,25	5,0	5,0	8,0	0,75	0,5	513 400*	7500
M4	UPX30	0,5-3,0	14,75	6,0	6,0	10,0	0,75	0,7	514 200	5000
	UPX45	3,0-4,5	16,25					0,7	514 225*	4000
M5	UPX30	0,5-3,0	18,0	7,0	7,0	11,0	1,0	1,1	515 175	2500
	UPX55	3,0-5,5	20,5					1,2	515 200*	2500
M6	UPX30	0,5-3,0	21,5	9,0	9,0	13,0	1,5	2,3	516 175	1500
	UPX55	3,0-5,5	24,5					2,5	516 200*	1500
M8	UPX30	0,5-3,0	22,5	11,0	11,0	16,0	1,5	3,5	518 125	750
	UPX55	3,0-5,5	25,5					3,9	518 150*	750

** **Non-stock item:** minimum order quantity required after depletion of stock*

All dimensions in mm - Technical data subject to modification
Tolerances and characteristics see chapter 'Technical Information'

MADE IN BELGIUM EN 9100 CERTIFIED

Aluminium

Round shank
Countersunk head
Open end

UFO

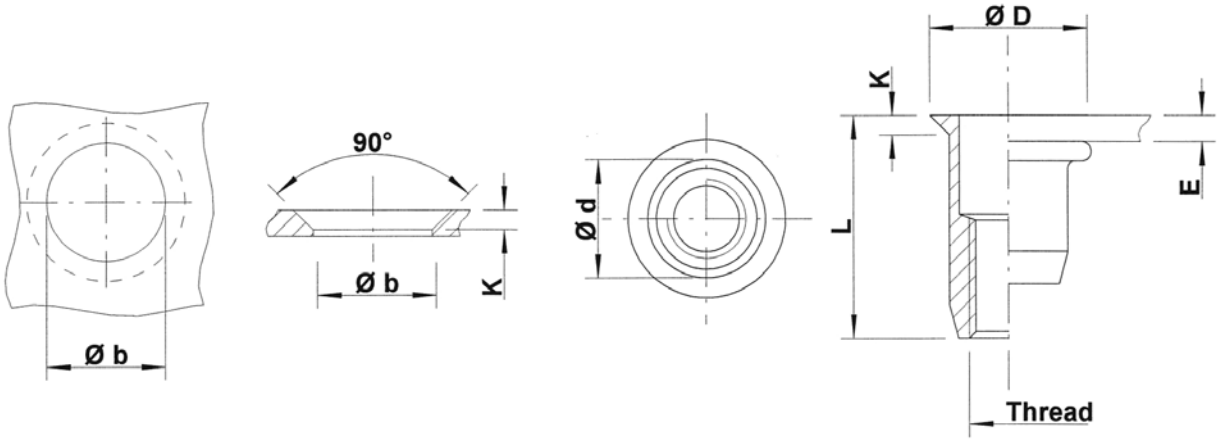

THREAD	TYPE	E = grip	L	$b^{+0,1}$ = drill dia	d = shank dia	D	K	kg/1000	ORDER CODE	BOX Q
M3	UFO35	1,7-3,5	11,25	5,0	5,0	8,0	1,5	0,4	513 550	10000
M4	UFO35	1,7-3,5	11,5	6,0	6,0	9,0	1,5	0,5	514 350	7500
	UFO50	3,5-5,0	13,0					0,5	514 375	5000
M5	UFO40	1,7-4,0	13,0	7,0	7,0	10,0	1,5	0,7	515 250	5000
	UFO65	4,0-6,5	16,0					0,8	515 275	4000
M6	UFO45	1,7-4,5	17,0	9,0	9,0	12,0	1,5	1,5	516 250	2000
	UFO65	4,5-6,5	19,0					1,6	516 275	2000
M8	UFO45	1,7-4,5	19,0	11,0	11,0	14,0	1,5	2,1	518 175	1250
	UFO65	4,5-6,5	21,0					2,2	518 200	1250
M10	UFO45	1,7-4,5	21,0	12,5	12,4	15,4	1,5	2,5	510 250	1000
	UFO65	4,5-6,5	23,0					2,7	510 275*	1000

** **Non-stock item:** minimum order quantity required after depletion of stock*

All dimensions in mm - Technical data subject to modification
Tolerances and characteristics see chapter 'Technical Information'

MADE IN BELGIUM EN 9100 CERTIFIED

Aluminium

Round shank
Countersunk head
Closed end

UFX

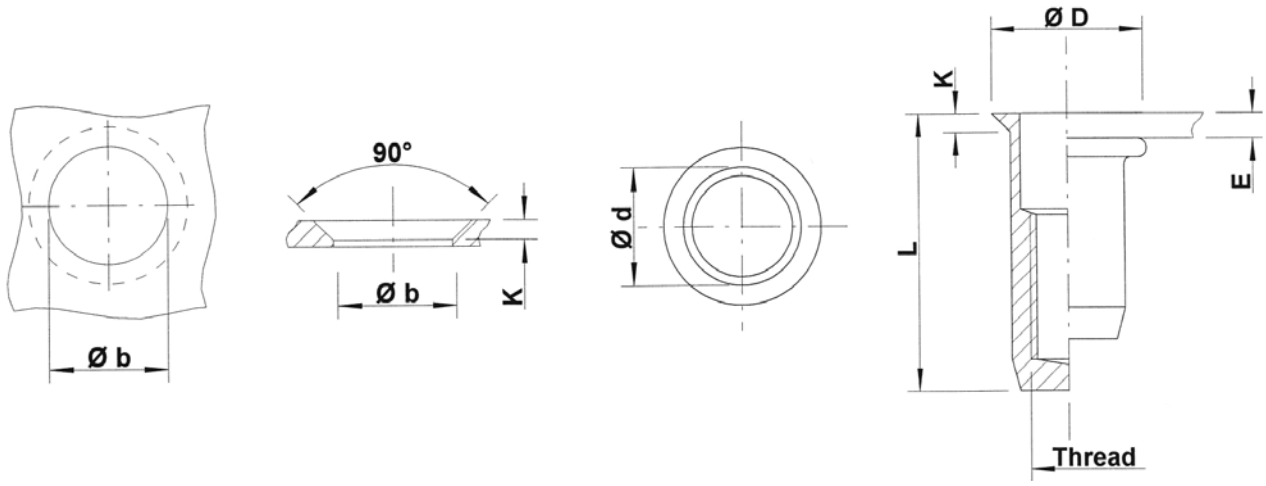

THREAD	TYPE	E = grip	L	$b^{+0,1}$ = drill dia	d = shank dia	D	K	kg/1000	ORDER CODE	BOX Q
M4	UFX35	1,7-3,5	15,5	6,0	6,0	9,0	1,5	0,7	514 450	5000
	UFX50	3,5-5,0	17,0					0,7	514 475*	5000
M5	UFX40	1,7-4,0	18,0	7,0	7,0	10,0	1,5	1,0	515 375	3000
	UFX65	4,0-6,5	20,5					1,1	515 400*	3000
M6	UFX45	1,7-4,5	22,0	9,0	9,0	12,0	1,5	2,1	516 400	1500
	UFX65	4,5-6,5	24,0					2,3	516 425*	1500
M8	UFX45	1,7-4,5	25,0	11,0	11,0	14,0	1,5	3,3	518 325*	1000
	UFX65	4,5-6,5	28,0					3,7	518 350*	750

** **Non-stock item:** minimum order quantity required after depletion of stock*

All dimensions in mm - Technical data subject to modification
Tolerances and characteristics see chapter 'Technical Information'

MADE IN BELGIUM EN 9100 CERTIFIED

Aluminium

Round shank
Low profile head
Open end

UKO

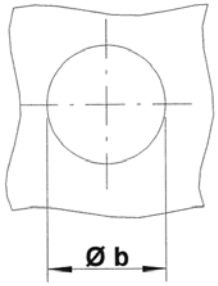

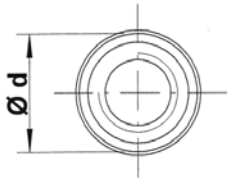

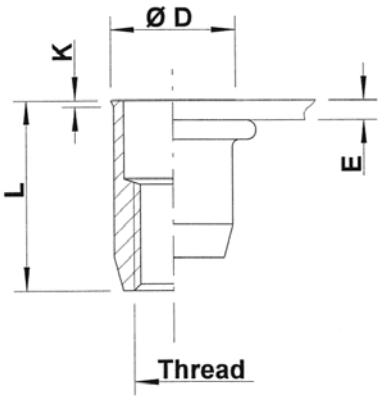

THREAD	TYPE	E = grip	L	$b^{+0,1}$ = drill dia	d = shank dia	D	K	kg/1000	ORDER CODE	BOX Q
M4	UKO30	0,5-3,0	10,75	6,0	6,0	6,5	0,5	0,4	514 525	10000
M5	UKO30	0,5-3,0	12,0	7,0	7,0	7,5	0,5	0,5	515 500	5000
M6	UKO30	0,5-3,0	14,5	9,0	9,0	9,5	0,5	1,2	516 500	3000
M8	UKO30	0,5-3,0	16,0	11,0	11,0	11,5	0,5	1,8	518 450	2000

All dimensions in mm - Technical data subject to modification
Tolerances and characteristics see chapter 'Technical Information'

MADE IN BELGIUM EN 9100 CERTIFIED

Our brochure on customized solutions available in different languages

Specials: Customized Solutions

In-house R&D and technical support for specific applications

In 2014 Dejond has 60 years of experience in developing and manufacturing **TUBTARA®** blind rivet nuts. **TUBTARA®** has become synonymous with high quality performance, innovation, in-house R&D and technical support. Always one step ahead of industry demand.

Tubtara's manufactured to customers' specifications, are developed to suit the demands of almost every application. These customized solutions offer additional features to the standard **TUBTARA®** such as increased torque-to-turn, sealing, controlled deformation, integration into parent material, centering, pressure spread, compatibility with other fasteners or tools, special thread requirements etc. The Tubtara's designed for the latest aerospace programmes for instance are used in composite material and aluminium structures on wing parts and seats.

Besides blind rivet nuts, Dejond also concentrates on cold forming selected parts according to customers' drawings for very specific applications.

For a detailed summary, visit **www.tubtara.com** and click on 'customized solutions'.

MADE IN BELGIUM EN 9100 CERTIFIED

Watertight (H)DPX TUBTARA®

Round or (semi-)hexagonal shank
Flat head with underhead seal
Open or closed end
Stainless steel, steel and aluminum

(H)DPX

Watertight IP 67*

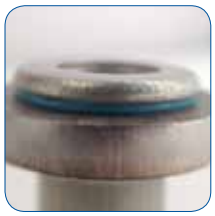

New watertight solution : TUBTARA® with seal under the head

Seal

The non-reactive peripheral seal, made of flexible organic based material, can be applied under the head of a **TUBTARA®**. It is resistant to many automotive oils, antifreeze and transmission fluids.

Most common type:

Material	Polyurethane	Reusability	yes
Colour	blue	Bead form	concave
Sealing capacity	> 150 bar	Cure method	heat cure
Temperature range	-40 +120 °C	Waterproof	IP67 *
Shore hardness	50 A range		

*only guaranteed under Dejond test conditions – certificates available

TUBTARA® design

The underhead seal reassures an IP 67 waterproof Tubtara-sheet assembly (if correctly installed). During installation of the **TUBTARA®**, the material is gap filling, forming a robust seal between mating surfaces.

The seal thickness varies. Compared to the same part without seal, this implies a reduced grip range and increased head height. Factors like seal thickness, hole size and setting force influence head height after installation (K2). See catalogue pages for K2 reference values.

The seal can be applied

- on Tubtara's in stainless steel, aluminium and coated steel,
- to the underhead bearing surface of a flat head **TUBTARA®** (not recommended underneath countersunk or low profile heads),
- on Tubtara's with round or (semi-)hexagonal shank, open or closed end, from M4 till M12.

Samples

For detailed product offer: see pg 13, pg 21, pg 29 and pg 35
Samples, pricing, lead times and alternative seal options available on request.

MADE IN BELGIUM EN 9100 CERTIFIED

Stainless watertight HX TUBTARA®

Semi-hexagonal shank
Flat head with underhead seal
Closed end
Stainless steel 304 & 316

HX

watertight
10 bar (IP68)

Stainless watertight HX TUBTARA® succesful up to pressure of at least 10 bar

Special HX head type

The watertight HX head ensures metal-to-metal contact after setting, therefore assuring spin out resistance. The concept guarantees a well functioning seal away from the possible burrs at the drilled hole in the plate (see photo 3). The underhead seal provides very good protection against ingress of fluids, moisture, oil or dirt even under high pressures up to at least 10 bar. IP 68 guaranteed under Dejond test conditions.

Standard o'ring seal material is NBR (see pg 80). Other materials are available on request.

Applications

The HX **TUBTARA®** can be used in a wide variety of markets and applications.

Samples

For detailed product offer: see pg 20 and pg 34.

The steel version of the watertight HX is a standard part available in Zinktop 480h (Cr^{VI}-free) (see page pg 50).

MADE IN BELGIUM EN 9100 CERTIFIED

Stainless steel TUBTARA® with Seal Inox®

Semi-hexagonal or knurled shank
Standard head types
Open or closed end

Seal Inox® topcoat on stainless TUBTARA® prevents galling

What is Seal Inox®?

Seal Inox® is a topcoat that makes it easier to assemble stainless steel threaded parts. The integrated lubricant additive in this topcoat prevents gripping during assembly, also called 'galling'.
Galling is caused by adhesion of two sliding surfaces under increased friction and often occurs between stainless steel threaded connections

Characteristics :

- thin dry layer
- can be applied in single or two layers
- visually distinguishable grey treatment, other colours on request
- friction coefficient 0.09 – 0.14 (according to DIN EN ISO 16047)
- temperature resistance 180°C
- conforms to ELV and RoHS, Cr^{6+} free

Benefits of a Seal Inox® topcoat on stainless TUBTARA® blind rivet nuts

- reduces friction and prevents galling
- provides a higher clamping force
- reduces assembly time
- slows down contact corrosion
- protects against various chemicals e.g. chlorides, acids and oils
- can be applied on our different stainless steel qualities : 304, 316, 316Ti, 904L
- is preferentially applied on hexagonal or knurled Tubtara's since Seal Inox® will be present on both inside and outside surfaces, thus potentially reducing torque-to-turn for round Tubtara's.

Galling between a stainless bolt or screw and a stainless **TUBTARA®** can occur when the assembly is done with a power tool (often at high speeds), but also when the bolt or screw is assembled and tightened by hand.

Availability

Seal Inox® is only applied to order (non-standard).
Prices and lead times available on request.

MADE IN BELGIUM EN 9100 CERTIFIED

Stainless Steel A5 & A6

Standard shank versions
Standard head types
Open or closed end
1st and 2nd grips

superior corrosion protection

Cold formed TUBTARA® in high alloy austenitic stainless steel A5 and A6

Material

Stainless steel A5 : 316 Ti – WNr 1.4571
Stainless steel A6 : 904L – WNr 1.4539

Applications

- extremely demanding, chloride bearing applications where even A4 fasteners in stainless 316 offer insufficient corrosion protection
- A6 grade is also armoured against strong acid bearing environments
- civil engineering, tunnel infrastructures, ceiling panels in swimming pools etc.

Important advantages

- improved corrosion protection, mainly thanks to considerable nickel and molybdenum content
- A6 guarantees increased protection against pitting and crevice corrosion, reaching a PRE (pitting resistance equivalent) value of 35 (compared to PRE 25 for stainless 316)

Samples

Following samples available from stock: stainless A6 M6 UPO 30 – stainless A5 M8 UPO30 / M8 UPO 65 / M8 UFO 65 / M8 UKO 30 / M8 HUKO 30

Development of other dimensions upon request

MADE IN BELGIUM EN 9100 CERTIFIED

bigHead TUBTARA®

Extra large head
Standard **TUBTARA®**
Steel, stainless steel A2 & A4

for composite materials

TUBTARA® with extra large head for mechanical joining of composites or strong anchor applications

Design

A disc or oversized washer is welded onto a standard Tubtara blind rivet nut's head. Both the rivet nut and the disc can feature additional characteristics resulting in a wide product versatility. A customized design could incorporate additional shank features (knurl, hex), disc forms (square, cylindrical) or characteristics like a keyed head or underhead cross.

Advantages for composite applications

- customized mechanical fastening solutions
- the oversized head provides a large bearing area
- the bigHead is ensuring a greater load distribution into the substrate, resulting in higher pull-out values
- with a perforated disc design, the Tubtara can lock securely into position, embedded or not
- installed quickly and tightly, despite burrs or uneven surfaced substrates
- is hole size tolerant
- allows easy inspection possibility
- requires minimal surface preparation and can be disassembled after installation

The collaboration between bigHead Bonding Fasteners Ltd. and Dejond results from a customer specific application in the marine industry.

MADE IN BELGIUM EN 9100 CERTIFIED

TUBTARA® with improved knurls

Nominal, knurled shank
Flat or low profile head
Open or closed end
Steel, stainless steel 304 & 316

UPO & UKO KN

improved nominal knurls

TUBTARA® with improved knurl design and nominal diameter

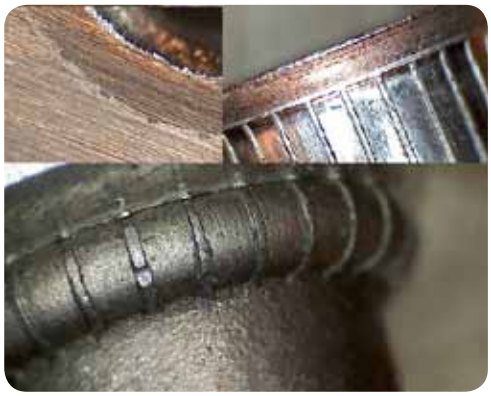

Comparison of torque-to-turn reference values* with Steel M6 UKO 30, low profile head and smooth shank:

Steel M6 UKO 30 KN	low profile head, improved knurl	+ 15 %
Steel M6 UPO 30	flat head, smooth shank	+ 30 %
Steel M6 UPO 30 KN	flat head, improved knurl	+ 45%
Steel M6 ATO 30	anti-turn head, round shank	+ 100%
Steel M6 HUPO 30	flat head, hexagonal shank	+ >300%

* All Tubtara's set in a 1,5 mm thick steel HRB 55 plate
Real values depending on setting conditions

Benefits

Ensuring increased torque-to-turn resistance, resulting in up to **15% higher Nm** values compared to smooth shank parts (values depending on material choice & geometry)

Design

- KN knurls are optimal in size and number to bite into soft (some aluminium grades) and even in hard (steel and stainless steel) base material
- contrary to the splined RS, the KN Tubtara has a nominal shank diameter
- the UKO KN version makes flush installation possible
- UFO KN programme in progress (knurls on shank and under the head)

Samples

For detailed product offer: see pg 14, pg 15, pg 43 and pg 44

Samples of stainless M5 UFO35 KN available on request

MADE IN BELGIUM EN 9100 CERTIFIED

Setting equipment

A **TUBTARA®** can be set with a hand- or pneumatic tool, a press or an automatic installation unit.

● Hand tools to set blind rivet nuts

DFS 307 T

Compact & practical hand tool
for light duty assembly.

Capacity:
Alu: M3 - M6
Steel: M3 - M5

DFS 311 T

Strong and reliable hand tool for heavy
duty assembly in the field.

Capacity:
Steel & Alu: M6 - M12
Stainless steel: M6 - M10

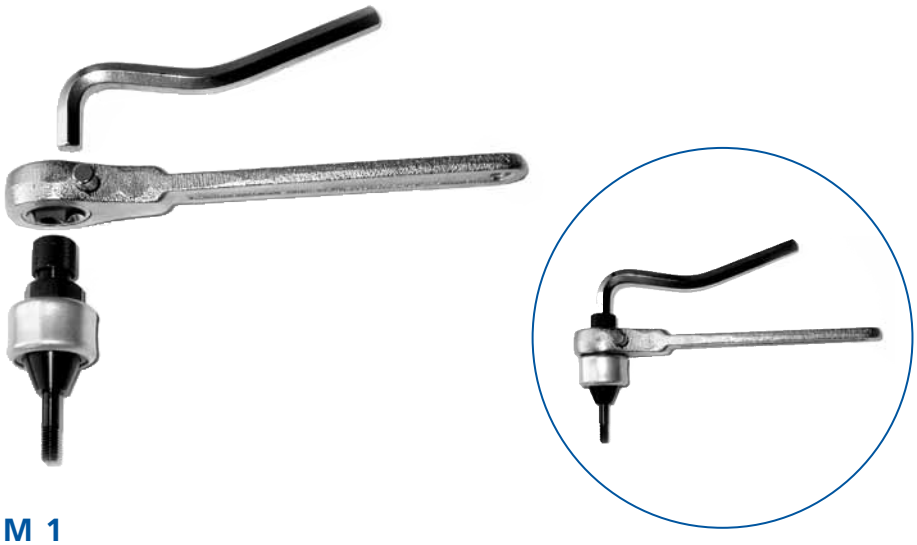

NM 1

Small hand tool for prototype work and repairs.

Capacity:
Steel & Alu: M4 - M12
Stainless steel: M4 - M6

DFS 309 T

Heavy duty hand tool for field and low volume production use.
Push and pull mechanism.

Capacity:
All materials: M4 - M10

Spare parts available from stock

- All parts for the current NM1 and DFS hand tools

- Add-on hex tooling to convert round holes into hexagon – can be used on standard setting equipment in the market

5059-9211	anvil M4 + lock nut
5059-9221	anvil M5 + lock nut
5059-9231	anvil M6 + lock nut
5059-9241	anvil M8 + lock nut
5059-9251	anvil M10 + lock nut
5059-9102	punch guide M4-M8

5059-9571	punch M4
5059-99641	punch M5
5059-99741	punch M6
5059-99821	punch M8
5059-9881	punch M10
5059-9111	punch guide M10

- Most spare parts for the following discontinued hand and pneumatic tools (until depletion of stock) : NM1 Kombi - NG2 - NG7 - NM9 - NM6 - NG6

Setting method

Select one of the **TUBTARA®** blind rivet nuts out of our productrange and a setting tool adequate for the application. Take a test workpiece and drill an appropriate hole

Screw the **TUBTARA®** (A) on the mandrel (B) of the setting tool. For an open version the mandrel should protrude about 1 mm, for a closed one until you feel resistance.
Screw the anvil (C) against the head of the **TUBTARA®** and block it with the locking nut (D).

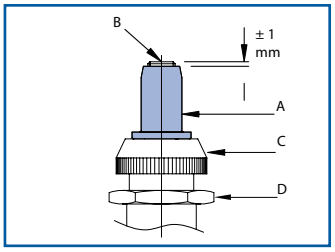

Introduce the **TUBTARA®** mounted on the setting tool, into the hole of the workpiece.

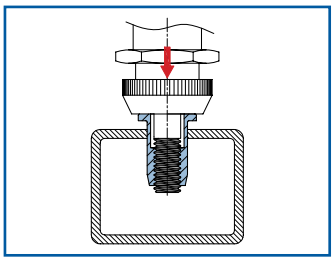

Set the **TUBTARA®**. The deformation chamber of the **TUBTARA®** is now forming the counterhead on the underside of the workpiece (bulb).

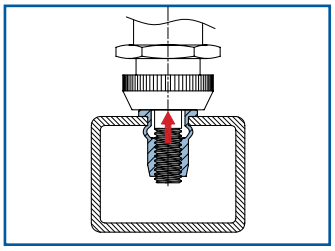

Unscrew the mandrel from the **TUBTARA®**.

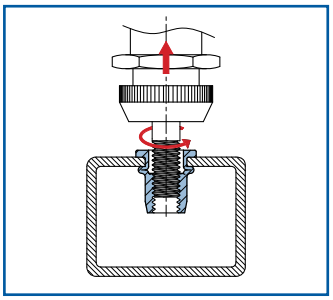

The **TUBTARA®** is set. Now you can easily insert your bolt or screw to assemble a component.

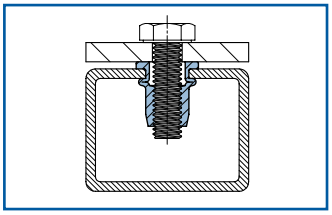

Countersunk heads

When you use a **TUBTARA®** with a countersunk head, always countersink at 90° so that the head of the installed **TUBTARA®** protrudes about 0,1 mm above your workpiece. This ensures direct contact with the assembled component.

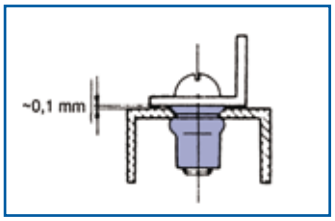

Don't you have the possibility to countersink?
Use a low profile head!

Materials

The **TUBTARA®** is available from stock in steel, aluminium and stainless steel 304 & 316.

For critical bearing environments, we can also offer the following solutions to cope with most environmental conditions :

- superior cold formed stainless A5 or A6 quality on demand,
- several finishing options on stainless like Cadmium, ZnNi, Seal Inox®,
- passivated stainless steel.

Available from stock:

Material			WNr
Aluminium	AlMg2,5	5052	3.3523
Steel	C8C	QST 34-3	1.0213
Stainless steel A2	304Cu		1.4567
Stainless steel A4	316Cu		1.4578

Available on request :

Material		WNr
Stainless steel A5	316Ti	1.4571
Stainless steel A6	904L	1.4539

Material specifications are always subject to modifications.

How to choose the right material ?

A proper choice of the right material and coating of the **TUBTARA®** is very important to obtain optimal functionality during the whole life cycle, especially when environmental conditions are unknown or critical. Influences can be chemical (in water dissolved elements), abrasive (sand), heat, friction, contact with other metals, corrosive environments etc.

Requirements & solutions

	Aluminium	Steel with appropriate coating	Stainless A2	Stainless A4	Stainless A5	Stainless A6
colour distinction		xxx				
visual identification		xxx				
weight-saving	xxx		x	x	x	x
durable	x	x → xxx	xx	xxx	xxx	xxx
easily recycable	xxx	xxx	xxx	xxx	xxx	xxx
electrical conductivity	xxx	xx	xx	xx	xx	xx
high/low temperature properties	x	xx	xx	xxx	xxx	xxx
non-magnetic	xxx		x	x	x	x
increased corrosion resistance	xx	o	xxx	xxx	xxx	xxx
resistant to atmospheric exposure	xx	o	xxx	xxx	xxx	xxx
resistant to chloride atmospheres		o		xxx	xxx	xxx
resistant to polluted environments		o		xxx	xxx	xxx
resistant to harsh environments		o			xxx	xxx
resistant to process fluids		o			xxx	xxx
top coating possible		xxx				
passivation possible			x	x	x	x

Legend	
o	possible influence
x	small influence
xx	larger influence
xxx	largest influence

Galvanic couples

A suited material choice is not always easy and all conditions should be taken into account. The table below shows some connection guidelines for corrosion:

		Blind rivet nut material		
		zinc plated steel	aluminium	stainless steel 304 & 316
base metal wherein Tubtara is set	aluminium			
	zinc plated steel			
	brass, copper	T T®	T T®	
	stainless steel 4xx	T T®	T T®	
	stainless steel 304 & 316	T T®	T T®	

Legend	
	base metal and **TUBTARA®** ok
	base metal corrodes where in contact with **TUBTARA®**
T T®	base metal ok but **TUBTARA®** will corrode
	corrosion base metal heavily increased by **TUBTARA®**

We strongly advise to do some tests in the specific application environment. Samples are available on request.

Coatings

A suitable coating choice can offer additional characteristics to your **TUBTARA®**.

Coating on steel available from stock

Zinktop

High-quality Cr^{6+} & Ni free plating
Conforms with ROHS 2, Reach, ELV directives
96 h white rust - 480 h red rust
10µ ±2µ

Survey available coating offer

photo	coating description	standard / on request	salt spray test (h) ISO 9227		colour / aspect	corrosion protection	RoHS / Reach compliant	remarks
			white rust	red rust				
1	Zinc blue/white Cr^{3+}	REQ	24	72	blue/white	*	☑	Cr^{6+} free
2	Zinc black Cr^{3+}	REQ	48	96	black	*	☑	Cr^{6+} free
3/4	Zinc yellow Cr^{6+} *	ST	96	240	yellow	***	☒	phase out 2017*
5	Zinktop	ST	96	480	light grey	****	☑	Cr^{6+} and Ni free
6	Zinktop Cobalt free	REQ	96	480	light grey	****	☑	Cr^{6+}, Ni and Co free
7	Ultra 1000	REQ	240	1000	matt grey	*****	☑	Cr^{6+} and Ni free
8	ZnNi (Zinc Nickel)	REQ	quality according to customer's specs					
9	Vibraseal®	REQ	x	x	red, green			seals + anti-vibration
10	Gleitmo®	REQ	x	x	-			friction reduction
-	Seal inox®	REQ	x	x	-			avoids galling stainless steel

The Ultra 1000 is more than doubling the resistance to red rust in the salt spray test compared to the standard Zinktop. The offer of blue and black trivalent coatings, as well as the Cobalt free Zinktop, are developed to tackle imminent Reach regulations and can be delivered on demand.

* Zinc yellow Cr^{6+} plating is no longer standard and has been omitted from this catalogue.
Due to REACH phase out, production of steel yellow hexavalent chromated parts is being cut back, to discontinue completely latest March 21st, 2016 (latest application date).
For availability, only until depletion of stock and not later than September 21st, 2017 (sunset date), please contact our customer service.

Stainless Steel

All stainless steel Tubtara's have been treated by a special process to obtain a natural passivation layer, improving the corrosion resistance compared to common stainless steel parts in the market.

Optional coatings on stainless steel are

- Gleitmo® / Seal Inox®
- full passivation.

Why use a coating ?

Requirements & solutions :

	Zinktop on steel	Coloured plating on steel	Passivation on stainless steel	Gleitmo®	Vibraseal®	Seal Inox®	Molykote®
appropriate visual aspects		+					
colour distinction		+			o	o	
to avoid galling				+		+	+
reduction of friction				+		+	+
increase of friction				-		-	-
to avoid galvanic couple	o	o	+		+	+	
electrical conductivity	+				-	-	-
anti-vibration function					+		
increased corrosion resistance	+		+			+	
seal function					+	+	
UV illumination				+			

Legend	
-	negative influence
o	possible influence
+	positive influence

We strongly advise to do some tests in the specific application environment.
Samples are available on request.

Technical Data

General tolerances

	Head form	Dimensions in mm	Dimensions in inches
D (head diameter)	Flat head Countersunk head Low profile head	± 0,35 0 -0,5 -0,15 +0,3	±.014 0 -.020 -.006 +.012
K (head thickness)	Flat head Countersunk head Low profile head	±0,15 0 +0,3 -0,05 +0,3	±.006 0 +.012 -.002 +.012
L (length)	General Stainless M10 shank 13 mm	±0,35 ±0,5	±.014 ±.020
Metric thread= 6H			
Shank size	General (incl. KN) Splined shank (RS) M10 shank 12,4 mm	-0,02 -0,15 ±0,08 ±0,08	-.001 -.006 ±.003 ±.003

Example:

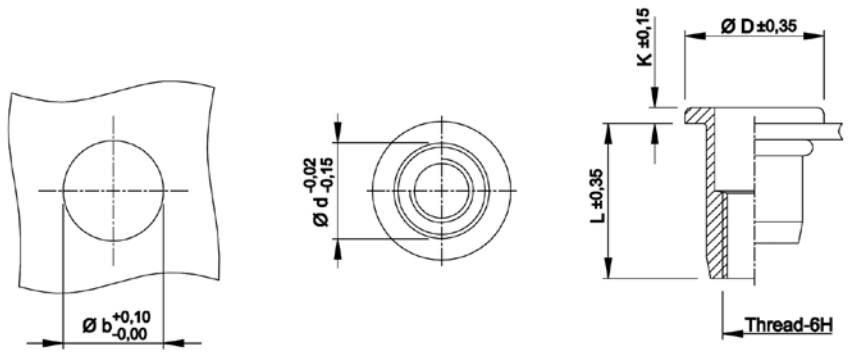

Recommended tightening torque values (Nm)

Max. recommended torque to avoid damaging the threaded connection and ensure optimal screw-nut assembly:

	M3	M4	M5	M6	M8	M10	M12
Aluminium	2,0	2,2	4,5	9,5	17,0	30,0	
Steel	2,5	3,0	5,9	11,0	25,0	49,0	80,0
Stainless Steel	2,5	3,0	5,9	11,0	25,0	49,0	

Recommendations for 8.8 bolts in steel and class A2-70 bolts in stainless steel.

Mechanical properties

The tables below show some indicative standard values for Tubtara's with round or hexagonal shank and flat head in first grip:

Mechanical reference values

product	material	pull-out	max. torque	torque-to-turn	shear test
		kN	Nm	Nm	kN
Round shank					
	Steel C8C	> 5,8	> 2,0	1,8	1,9
M3 UPO 20	Alu 5052	> 3,1	1,9	0,8	0,6
	SS 304Cu	-	-	-	-
M4 UPO 30	Steel C8C	> 10,8	> 7,5	2,7	2,6
M4 UPO 30	Alu 5052	> 4,5	4,9	1,4	1,1
M4 UPO 20	SS 304Cu	> 11,0	7,1	2,6	3,5
	Steel C8C	> 12,0	> 10,0	4,7	3,5
M5 UPO 30	Alu 5052	> 5,2	4,9	1,5	1,6
	SS 304Cu	> 14,5	> 16,0	3,0	4,8
	Steel C8C	> 21,0	> 19,0	7,0	5,0
M6 UPO 30	Alu 5052	> 10,5	16,0	3,2	2,4
	SS 304Cu	> 27,0	> 22,0	6,8	7,3
	Steel C8C	> 33,0	> 50,0	13,0	6,0
M8 UPO 30	Alu 5052	> 15,0	33,0	5,3	2,9
	SS 304Cu	> 40,0	> 70,0	9,0	9,0
	Steel C8C	> 40,0	> 70,0	15,0	8,0
M10 UPO 35	Alu 5052	> 20,0	39,5	7,0	3,7
	SS 304Cu	> 43,0	> 70,0	8,0	8,5
	Steel C8C	> 40,0	> 70,0	15,0	8,0
M10 SPO 35	Alu 5052	-	-	-	-
	SS 304Cu	> 43,0	> 70,0	13,0	8,4
	Steel C8C	> 63,0	> 150,0	32,0	11,5
M12 UPO 40	Alu 5052	-	-	-	-
	SS 304Cu	-	-	-	-
Hexagonal shank					
M4 HUPO 20	Steel C8C	> 8,8	> 7,5	> 5,5	2,6
	SS 304Cu	> 10,8	> 7,1	6,0	3,7
M5 HUPO 30	Steel C8C	> 12,0	12,0	> 6,5	3,6
	SS 304Cu	> 15,5	15,0	> 9,0	4,8
M6 HUPO 30	Steel C8C	23,0	> 24,5	> 21,0	5,1
	SS 304Cu	24,5	> 23,0	> 22,0	7,2

product	material	pull-out	max. torque	torque-to-turn	shear test
		kN	Nm	Nm	kN
M8 HUPO 30	Steel C8C	32,8	> 50,0	> 30,0	6,6
	SS 304Cu	39,0	> 64,0	32,0	9,4
M10 HSPO 35	Steel C8C	> 40,0	> 70,0	50,0	7,9
	SS 304Cu	> 43,0	> 70,0	> 50,0	10,2
M12 HUPO 40	Steel C8C	> 63,0	> 150,0	68,0	12,5
	SS 304Cu	-	-	-	-

- Bolts class 8.8 were used
- > : value will be higher, but test could not be completed due to breakage of bolt or min. value is used as reference
- Steel plate (HRB 55) was used to set the **TUBTARA®** (approximately middle of grip range)

Geometrical reference values (open end parts)

product	material	setting force	stroke	size bulb forming	length under plate
		kN	mm	mm	mm
Round shank					
	Steel C8C	4,0	2,6	6,6 to 6,7	5,9 to 6,1
M3 UPO 20	Alu 5052	2,3	1,9	6,0 to 6,1	6,4 to 6,6
	SS 304Cu	-	-	-	-
M4 UPO 30	Steel C8C	4,5	2,8	7,8 to 7,9	6,7 to 6,8
M4 UPO 30	Alu 5052	2,2	2,7	7,7 to 7,8	6,8 to 7,0
M4 UPO 20	SS 304Cu	6,0	2,4	7,3 to 7,4	7,6 to 7,8
	Steel C8C	6,5	3,8	9,4 to 9,5	7,3 to 7,4
M5 UPO 30	Alu 5052	3,4	3,6	9,3 to 9,4	7,3 to 7,4
	SS 304Cu	8,0	3,5	8,9 to 9,2	7,3 to 7,5
	Steel C8C	9,5	4,0	11,6 to 11,8	9,3 to 9,6
M6 UPO 30	Alu 5052	4,9	3,3	11,2 to 11,3	10,0 to 10,2
	SS 304Cu	13,0	4,0	11,3 to 11,6	9,6 to 10,0
	Steel C8C	12,0	4,0	13,6 to 13,8	10,9 to 11,2
M8 UPO 30	Alu 5052	5,5	3,8	13,6 to 13,8	11,1 to 11,3
	SS 304Cu	15,4	4,2	13,6 to 13,7	11,3 to 11,6
	Steel C8C	14,5	4,4	15,7 to 15,8	14,4 to 14,5
M10 UPO 35	Alu 5052	8,0	4,7	15,6 to 15,9	14,1 to 14,4
	SS 304Cu	15,5	4,0	14,8 to 15,0	13,6 to 14,0
	Steel C8C	15,5	4,5	16,1 to 16,3	15,5 to 15,7
M10 SPO 35	Alu 5052	-	-	-	-
	SS 304Cu	23,5	4,6	15,9 to 16,1	16,6 to 16,9

product	material	setting force	stroke	size bulb forming	length under plate
		kN	mm	mm	mm
	Steel C8C	20,5	6,5	20,8 to 21,0	17,5 to 18,0
M12 UPO 40	Alu 5052	-	-	-	-
	SS 304Cu	-	-	-	-
Hexagonal shank					
M4 HUPO 20	Steel C8C	5,5	2,8	7,6 to 8,3	6,1 to 6,4
	SS 304Cu	5,3	2,5	7,5 to 7,9	7,5 to 7,9
M5 HUPO 30	Steel C8C	6,1	4,0	9,8 to 10,4	7,8 to 8,2
	SS 304Cu	7,2	3,3	9,1 to 9,5	7,1 to 7,3
M6 HUPO 30	Steel C8C	11,5	3,6	11,4 to 12,5	9,7 to 10,1
	SS 304Cu	10,0	4,3	11,9 to 12,3	9,0 to 9,3
M8 HUPO 30	Steel C8C	14,0	4,6	14,3 to 15,4	10,7 to 11,1
	SS 304Cu	14,0	4,5	14,0 to 14,5	10,7 to 11,1
M10 HSPO 35	Steel C8C	13,0	5,5	17,5 to 18,6	14,4 to 14,7
	SS 304Cu	19,0	6,0	17,0 to 17,6	16,0 to 16,7
M12 HUPO 40	Steel C8C	21,0	6,6	20,7 tot 21,6	15,0 to 16,1
	SS 304Cu	-	-	-	-

Length under plate of open end parts: values obtained after setting.

To obtain the length under the plate after setting of closed end parts, you can add the following sizes to the above-mentioned:

Steel and aluminium (mm)	
M3	3,5
M4	4,5
M5	6,0
M6	7,0
M8	8,0
M10	10,0
M12	10,0

Stainless steel (mm)	
M4	4,5
M5	6,0
M6	7,0
M8	8,0
M10	7,0

In some cases the real length will be shorter. All dimensions can be checked on the technical data sheets in our catalogue.

Variations due to setting and environmental conditions can be expected in practice.
The values can be used as reference and optimized by using additional features.

Grip range influences

The following values can be used as a guidance for other versions :

		ALUMINIUM			STEEL			STAINLESS STEEL 304 + 316		
TYPE	Grip	SETTING FORCE	STROKE	PULL-OUT	SETTING FORCE	STROKE	PULL-OUT	SETTING FORCE	STROKE	PULL-OUT
	mm	N	mm	N	N	mm	N	N	mm	N
M3 UPO 20	1,0	2000	2,0	3750	4000	2,5	> 5000			
	2,0	2600	1,5	3280	4750	2,0	> 5000			
M3 UPO 30	2,0	1850	1,5	3900	3700	2,5	> 5000			
	3,0	2050	1,0	3968	4750	2,0	> 5000			
M4 UPO 20	1,0							4900	2,0	> 9000
	2,0							5500	1,5	> 9000
M4 UPO 30	1,0	2100	3,0	5170	4300	2,5	> 8000			
	3,0	2430	1,0	4330	5650	1,5	> 8000			
M4 UPO 35	2,0							5500	2,6	> 9000
	3,5							6000	1,7	> 9000
M4 UPO 45	3,0	2050	2,8	4838	4200	2,5	> 8000			
	4,5	2875	1,5	4421	5000	1,5	> 8000			
M5 UPO 30	1,0	3050	3,5	5500	6150	3,5	12240	7500	3,0	> 15000
	3,0	3650	2,0	5000	7200	2,5	9600	8500	1,7	> 15000
M5 UPO 50	3,0							7500	4,0	> 15000
	5,0							8500	2,0	> 15000
M5 UPO 55	3,0	3000	3,5	6450	5750	4,0	11800			
	5,5	4300	1,5	5525	9650	2,0	10300			
M6 UPO 30	1,0	4500	3,0	11000	9400	4,0	21200	11850	4,0	> 24000
	3,0	5750	2,0	10000	12000	3,0	18500	14460	3,0	> 24000
M6 UPO 50	3,0							13500	4,5	> 24000
	5,0							15000	2,8	> 24000
M6 UPO 55	3,0	4500	3,5	11000	9000	3,5	22700			
	5,5	6100	1,8	10000	11000	2,0	19700			
M6 UPO 80	5,5	4950	4,7	9160	8700	4,0	19900			
	8,0	5400	2,0	8200	11750	2,5	17200			
M8 UPO 30	1,0	5000	3,0	14900	11500	4,0	30400	14500	4,2	> 41000
	3,0	6600	2,0	14000	13750	2,5	26100	18000	2,8	> 41000
M8 UPO 55	3,0	5400	4,0	15500	11500	4,0	32500	14500	5,5	> 41000
	5,5	7400	2,0	11200	15500	2,5	31900	18500	3,0	> 41000

		ALUMINIUM			STEEL			STAINLESS STEEL 304 + 316		
TYPE	Grip	SETTING FORCE	STROKE	PULL-OUT	SETTING FORCE	STROKE	PULL-OUT	SETTING FORCE	STROKE	PULL-OUT
	mm	N	mm	N	N	mm	N	N	mm	N
M8 UPO 80	5,5	5900	4,0	16100	10700	4,0	32400			
	8,0	7850	2,0	13600	14700	2,5	26500			
M10 UPO 30	1,0							14500	3,5	> 45000
	3,0							18500	2,5	> 45000
M10 UPO 35	1,0	6750	4,0	22100	13600	4,5	39600			
	3,5	9000	2,5	17700	17000	2,5	32400			
M10 UPO 50	3,0							14500	3,5	> 39500
	5,0							18500	2,5	> 37000
M10 UPO 60	3,5	9000	5,0	25250	14900	4,0	42300			
	6,0	13000	3,0	23000	17900	2,5	31700			
M10 SPO 35	1,0				13500	4,5	40500	19500	4,5	> 45000
	3,5				16100	2,5	36100	26500	3,5	> 45000
M10 SPO 60	3,5				15900	5,5	48000			
	6,0				20400	3,0	37500			
M12 UPO 40	1,0				19500	5,5	> 50000			
	4,0				25000	4,0	> 50000			
M12 UPO 70	4,0				19500	5,5	> 50000			
	7,0				25000	4,0	> 50000			

Setting Force or Upset Load: Force (in Newton) necessary to deform the **TUBTARA®** referred to in an adequate way.

Upset Stroke: Stroke (in mm) that should be set on the setting tool to give the **TUBTARA®** referred to, the adequate deformation.

Pull-out or Ultimate Thread Strength: Surpassing this ultimate force (in Newton), the thread of the set **TUBTARA®** will be pulled out.

The mentioned values are average reference values only.
We strongly advise the customer to do his own tests in the proper material thickness and specific application.

Testing methods

In addition to the standard inspections during the production process the following tests can be done on customer's request :

- Pull-out test
- Maximum torque
- Push-out test
- Shear test
- Torque-to-turn
- Length under plate
- Size bulb forming

HX TUBTARA® with seal under the head

Information about NBR O-Ring & compatibility with other products					
Shore Hardness	70 - 95	Aromatic Hydrocarbons	x	Lye	x
Hydraulic fluids	xxxx	Aliphatic Hydrocarbons	xxx	Chlorinated Hydrocarbons	x
Fuel Oils	xx	Water under 80°C	xxx	Ozone & Sunlight	x
Organic Oils	xxxx	Water over 80°C	x	Temperature range °C	-35 +120
Brake Fluid	-	Alcohols	xx	Electr. properties	-
Silicone & Grease	xx	Ketone	-	Compression sets	xxx
Gasoline	xxx	Acid (concentrated)	-	Flame resistance	No
Aromatic fluids up to 50 %	xx	Acid (diluted)	x		
Kerosene	xxx				

Key: xxxx very good --> x satisfactory - not suitable.
Storage: protect against UV-light; store in a dry and dark place (all boxes are marked)
Seals in other materials like Viton on request.

Conversion table

Multiply	by	To get
millimeter (mm)	.03937	inch (in)
inch (in)	25,4	millimeter (mm)
kilogram (kg)	2,2046	pound (lb)
pound (lb)	0,4536	kilogram (kg)
Newton (N)	0,2248	pound-force (lbf)
Newton metre (Nm)	8,8507	pound-inch (Lb-In)

3D drawings

See our website **www.tubtara.com** and click on '3D drawings'

3D and 2D drawings available for all **TUBTARA®** stainless steel blind rivet nuts:

- downloadable in installed or uninstalled condition
- user input option for exact grip
- numerous formats (DWG, STP, SolidWorks, Autodesk, Spaceclaim, AutoCAD etc.)
- possibility to insert the **TUBTARA®** CAD drawing directly into the product design

External website hosted by "Traceparts online":

www.tracepartsonline.net/ws/dejond

Quality

Statements on Reach / RoHS / Conflict Minerals:

- see our website **www.tubtara.com** and click on 'Quality'
- contact our customer service for updated information.

EN 9100:2009 - AS 9100C - JISQ 9100:2009 certified


BUREAU VERITAS
Certification

DEJOND

EN 9100:2009
AS 9100C - JISQ 9100:2009

DEJOND IS NOT LIABLE FOR ANY PRINTING ERRORS AND RESERVES THE RIGHT TO CHANGE ALL DATA CONTAINED IN THIS CATALOGUE WITHOUT PRIOR NOTICE

Information cannot be copied or reproduced without permission of Dejond N.V.

General conditions available on our website www.dejond.com
Any dispute will fall within the exclusive jurisdiction of the courts of Antwerp

TUBTARA® - Riveting matters

TUBTARA®

a product by Dejond Cold Forming

Terbekehofdreef 55-59
2610 Wilrijk (Antwerp)
Belgium - Europe
Tel: +32 (0)3 820 34 36
Fax: +32 (0)3 820 35 36
E - mail: tubtara@dejond.com

www.tubtara.com

Edition March 2015